esa AUTOMOTION

The Powerful CNC Intelligence

General Purpose - Taglio

General Purpose - Cutting

vis-600

Potenza integrata da toccare

La linea completa di CNC con schermo touch e software incorporato per gestire macchine dalle più semplici a quelle custom, fino al limite incredibile di 128 assi.

Integrated power to touch

The complete CNC line with touch screen and bundled software to control machines from the simplest to the custom ones, up to the incredible limit of 128 axes.

60 years of experience industrial automation, constant innovation, italian passion. This is Esautomotion, the specialist of the most technologically advanced CNC.

Il nostro percorso di successo è iniziato quasi 60 anni fa e da allora abbiamo introdotto prodotti che hanno rivoluzionato il mercato dell'automazione industriale e del CNC, sia in Italia che a livello internazionale.

Our path of success began almost 60 years ago and since then we have introduced products that have revolutionized the industrial automation and CNC market, both in Italy and internationally.

The most important chapters in our history

1962: l'azienda viene fondata con il nome di ESA GV, con l'obiettivo di proporre soluzioni tecnologiche per l'automazione. È una delle prime, in Italia e in Europa, a presentare le schede elettroniche per la gestione di macchinari industriali

1985: Lancio di Tria, il primo CNC con tecnologia "real time", che migliora in modo sostanziale le performance delle macchine automatiche

2000: Nasce la serie Kvara, uno dei primi CNC PC-based e full-digital, che offre la possibilità di gestione degli assi e dei device esterni con Bus digitale e non più analogico

2006: Lancio della serie di CNC S500 e delle nuove famiglie di motori brushless E e ED. Esautomotion rivoluziona il mercato proponendo per prima l'idea di "Turn Key solution": il software è sempre incluso nel CNC, evitando al cliente l'ulteriore e costoso ricorso a sviluppatori o software house esterni, velocizzando così il time-to-market dei suoi progetti

2011: Attraverso un buyout, ESA GV cambia proprietà e assume il nome di Esautomotion. L'obiettivo dei nuovi azionisti è di espandere significativamente il giro di affari della società attraverso forti investimenti nell'innovazione e nell'internazionalizzazione delle attività.

2014: Nasce la serie di CNC S600. La tecnologia full touch viene adottata per gli schermi di tutti i modelli

2018: Quotazione alla Borsa di Milano per accedere a maggiori risorse economiche e cogliere ulteriori opportunità di crescita e diversificazione

2018: Trasferimento nella nuova e più spaziosa sede di Carpi, per migliorare sia la logistica che l'efficienza interne e dare un migliore servizio ai clienti

2019: Esautomotion è ormai un'azienda globalizzata, con sedi dirette in Germania, Spagna, USA, Brasile e Cina e una presenza tramite rivenditori negli altri paesi industrialmente importanti

2020: Nasce la serie VIS-800, massima espressione della tecnologia touch, della modularità e della comunicazione Ethercat full digital

1962: the company was founded with the name of ESA GV, with the aim of proposing technological solutions for automation. It is one of the first, in Italy and in Europe, to present electronic boards for the management of industrial machinery

1985: Launch of Tria, the first CNC with "real time" technology, which substantially improves the performance of automatic machines

2000: The Kvara series is born, one of the first PC-based and full-digital CNCs, which offers the possibility of managing axes and external devices with digital Bus

2006: Launch of the S500 CNC series and the new families of E and ED brushless motors. Esautomotion revolutionizes the market by being the first to propose the idea of "Turn Key Solution": the software is always included in the CNC, avoiding the customer the additional and costly use of external developers or software houses, thus speeding up the time-to-market of his projects

2011: Through a buyout, ESA GV changes ownership and takes the name of Esautomotion. The goal of the new shareholders is to significantly expand the company's turnover through strong investments in innovation and in the internationalization of activities.

2014: The S600 CNC series is born. Full touch technology is adopted for the screens of all models

2018: Listing on the Milan Stock Exchange to access more economic resources and seize further opportunities for growth and diversification

2018: Transfer to the new and more spacious headquarters in Carpi, to improve both internal logistics and efficiency and provide better customer service

2019: Esautomotion is now a globalized company, with direct offices in Germany, Spain, USA, Brazil and China and a presence through dealers in other industrialized important countries

2020: The VIS-800 series is born, the highest expression of touch technology, modularity and full digital Ethercat communication

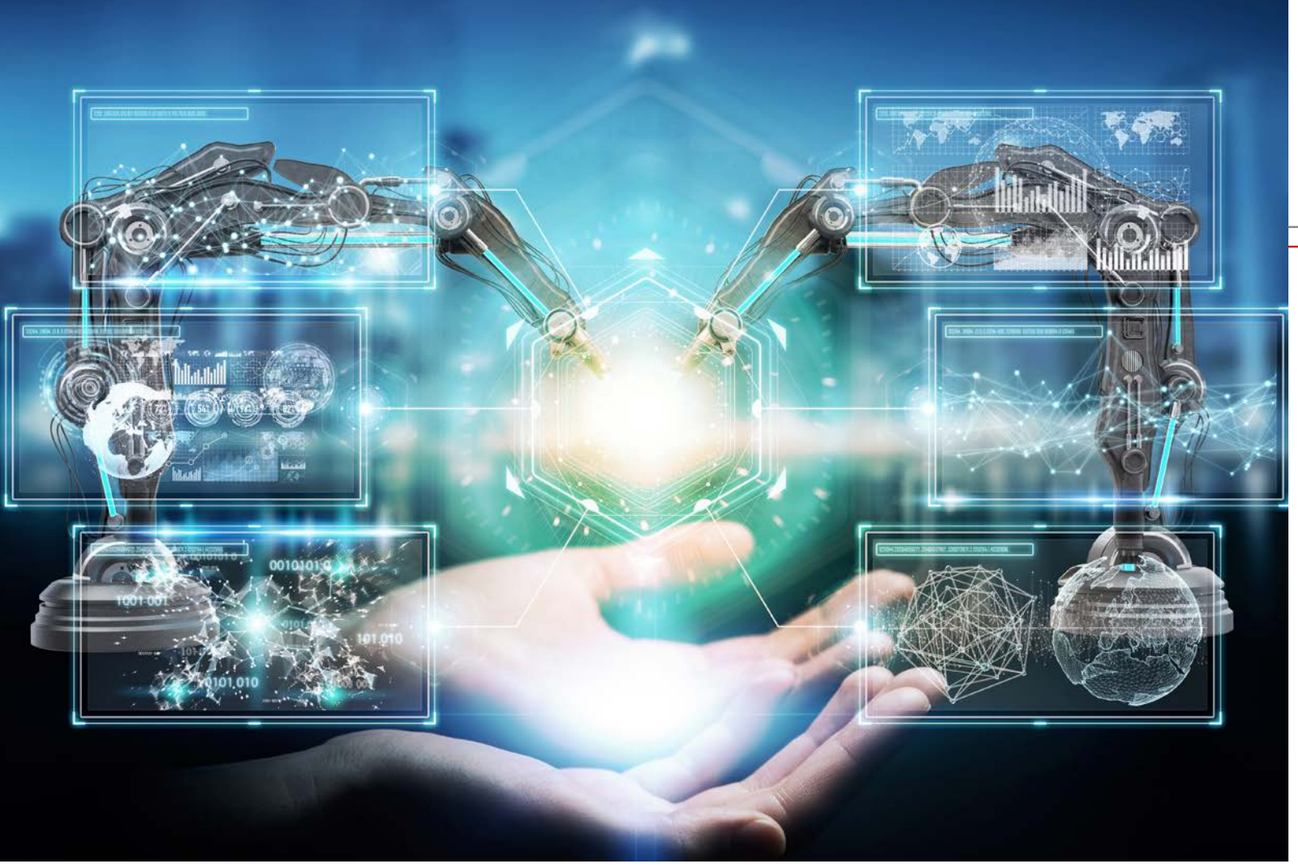

The philosophy of Esautomotion: offering higher value to customers through the best CNCs and service in the market.

La nostra mission è proporre ai clienti un'ampia offerta di prodotti, dispositivi e software evoluti che si integrino perfettamente con le parti meccaniche delle loro macchine, per automatizzarle secondo gli standard più elevati di efficienza e produttività, nel pieno rispetto delle logiche di Industria 4.0.
Le esigenze della clientela sono costantemente al centro della nostra attività: tutti i prodotti sono progettati per offrire un valore superiore e tangibile in termini di prestazioni migliori e di semplicità di utilizzo per gli operatori macchina.

Our mission is to offer customers a wide range of advanced products, devices and software that integrate perfectly with the mechanical parts of their machines, to automate them according to the highest standards of efficiency and productivity, in full compliance with the logic of Industry 4.0. . Customer needs are constantly at the heart of our business: all products are designed to offer superior and tangible value in terms of better performance and ease of use for machine operators.

Intelligent power: the exclusive product value from Esautomotion

Tutti gli addetti ai lavori posizionano i CNC Esautomotion saldamente tra i best in class del mercato, con punti di forza riconosciuti quali essere:

I CNC più potenti del mercato, grazie all'esclusiva architettura di progettazione
La particolare architettura di progettazione consente di offrire in ogni situazione performance inarrivabili in termini di precisione e controllo. Con i modelli top di gamma è possibile gestire un numero praticamente illimitato di assi, rendendo fattibili lavorazioni ritenute fino a ieri irrealizzabili.

I CNC più intelligenti del mercato, perché i software "turn key" sono sempre inclusi
Il software, sviluppato ad-hoc da Esautomotion secondo le specifiche esigenze di ogni cliente, è sempre incluso nella dotazione e rende il CNC immediatamente operativo, con un notevole risparmio a livello di costi e tempo.

I CNC più versatili del mercato: lo stesso hardware per tutte le applicazioni
L'hardware di tutti i CNC Esautomotion può gestire tutte le applicazioni, come ad es: piegatura e taglio lamiera, lavorazione legno e marmo, general purpose. Questo si traduce in un notevole vantaggio per i clienti OEM, in termini di maggiore conoscenza dei dispositivi e ottimizzazione dell'inventario

All experts place Esautomotion CNC firmly among the best in class on the market, with recognized strengths such as:

The most powerful CNC on the market, thanks to the exclusive design architecture.
The particular design architecture allows us to offer unrivaled performance in terms of precision and control in every situation. With the top of the range models it is possible to manage a practically unlimited number of axes, making it possible to work that was previously considered impossible.

The smartest CNC on the market, because turn key software is always included
The software, developed ad-hoc by Esautomotion according to the specific needs of each customer, is always included in the equipment and makes the CNC immediately operational, with considerable savings in terms of costs and time.

The most versatile CNC on the market: the same hardware for all applications.
The hardware of all Esautomotion CNC can manage all applications, such as: sheet metal bending and cutting, wood and marble processing, general purpose. This translates into a significant advantage for OEM customers, in terms of greater knowledge of the devices and inventory optimization

Value for customers is also a technical support service available 24/7 around the world

Esautomotion mette disposizione uno straordinario patrimonio di competenze sul CNC e l'automazione industriale maturato nei suoi 60 anni di attività.

Il nostro servizio di Assistenza Tecnica, formato da ingegneri e tecnici di elevata professionalità, è disponibile 7 giorni su 7 per risolvere ogni problematica tecnica, coprendo tutti i fusi orari grazie alla rete di filiali e rivenditori.

Esautomotion provides an extraordinary wealth of skills on CNC and industrial automation gained in its 60 years of activity.

Our Technical Assistance service, made up of highly professional engineers and technicians, is available 7 days a week to solve any technical problem, covering all time zones thanks to the network of branches and dealers.

OEMS and final users ask for powerful and easy to use CNCs.

Il mercato delle macchine CNC è sempre più concorrenziale, con players sia globali che locali.

Le macchine devono combinare un alto livello di specializzazione alla massima efficienza produttiva: prestazioni, flessibilità, e contenimento dei costi sono fattori critici per qualsiasi azienda per competere più efficacemente negli attuali scenari industriali.

I costruttori di macchine sono chiamati a rispondere a domande crescenti in termini di qualità, precisione, affidabilità, disponibilità e facilità d'uso.

Il controllo numerico, cuore e mente della macchina, deve dare sempre risposte certe e precise a tutte queste esigenze.

The CNC machine market is increasingly competitive, with both global and local players.

Machines must combine a high level of specialization with maximum production efficiency: performance, flexibility, and cost containment are critical factors for any company to compete more effectively in the current industrial scenarios.

Machine manufacturers are called to answer growing questions in terms of quality, precision, reliability, availability and ease of use.

Heart and mind of the machine, the numerical control must always give certain and precise answers to all these needs.

Intelligent power: S600 CNC series by Esautomotion has all the the right answers.

La serie S600 di Esautomotion offre una gamma completa di CNC eccezionalmente potenti e versatili per controllare macchine a coordinate cartesiane da 3 a 128 assi per tutte le applicazioni di taglio, asportazione e deformazione della lamiera.

Progettata per essere facilmente configurabile e adattabile alle diverse tecnologie di lavorazione, la serie S600 si caratterizza per la possibilità di essere personalizzata secondo le specifiche necessità dell'utente.

Massima attenzione è stata data anche alla facilità d'uso per l'operatore macchina, grazie a HMI semplici e intuitive.

In tutti i CNC della serie S600 l'azione intelligente è garantita dai software turn key sempre in dotazione, sviluppati da Esautomotion per assicurare operatività immediata, massimo controllo e un eccezionale livello di precisione in ogni applicazione.

I CNC S600 danno le prestazioni migliori e più affidabili quando uniti ai motori, azionamenti e schede di espansione originali Esautomotion.

Esautomotion's S600 series offers a full range of exceptionally powerful and versatile CNCs for controlling Cartesian coordinate machines from 3 to 128 axes for all sheet metal cutting and bending applications

Designed to be easily configurable and adaptable to different processing technologies, the S600 series is characterized by the possibility of being customized according to the users' most specific needs.

Greatest attention was given also to the ease of use for the machine operator, thanks to simple and intuitive HMI.

In all the CNCs of the S600 series, intelligent action is guaranteed by the bundled turn key software, internally developed by Esautomotion to ensure immediate operation, maximum control and an otstanding level of precision in every application.

The S600 CNCs give the best and most reliable performances when combined with the original Esautomotion motors, drives and expansion boards.

S 625-C-G

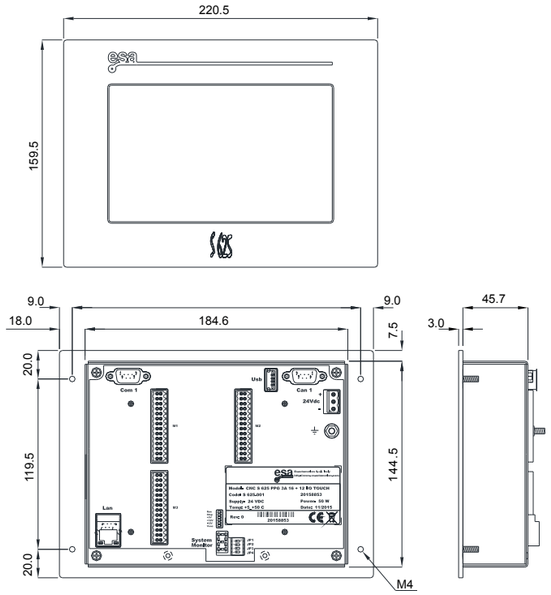

7" screen
3 axes +
16 input
12 output

S 630W-C-G

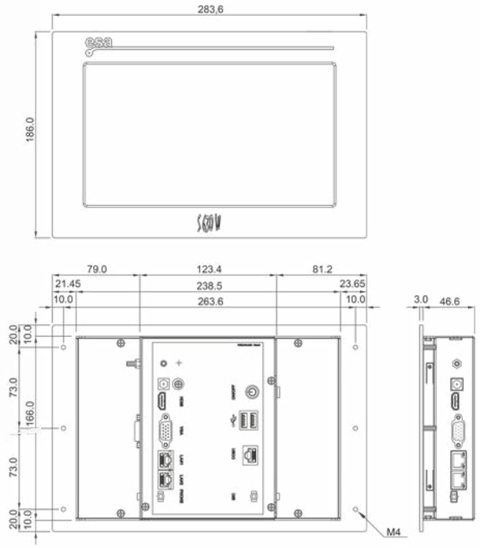

10" screen
4axes
32 input
32 output

S 630-C-G

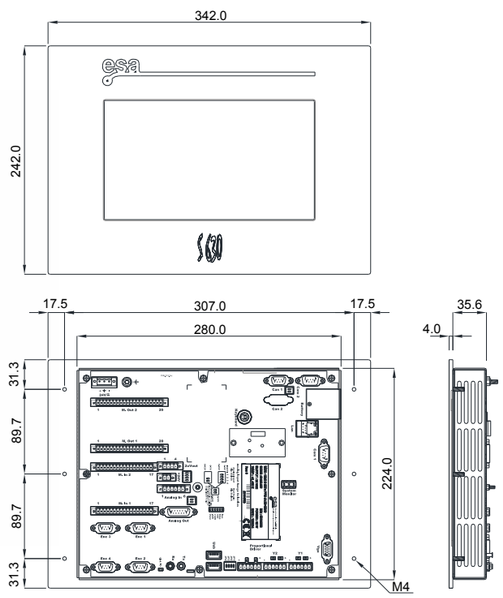

10"screen 4 axes
32 input + 32 output

S 640-C-G

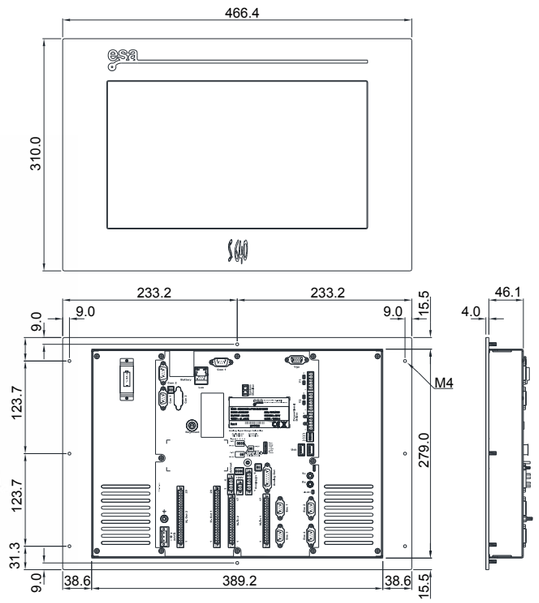

15"screen 4 axes up to (6 ax as an option)
32 input + 32 output

S 640W-C-G

15" screen
4 axes +
6 axes as an option
32 input
32 output

S 660W PC

19" screen
4 axes (up to 128 axes as an option)
32 input
32 output

S 650W PC

15" screen
4 axes (up to 8 axes as an option)
32 input
32 output

S 675W

21" screen
4 axes (up to 128 axes as an option)
32 input
32 output

Specifications

Technical Specifications of the Industrial PC

	S 675 W	S 660 W	S 650 W	S 640 W	S 630 W
Display	21.5 Color TFT LCD	19" Color TFT LCD	15" Color TFT LCD	15.6" Color TFT LCD	10.1" Color TFT LCD
Display resolution	Full HD 1920 x 1080 (widescreen)	SXGA - 1280x1024	XGA - 1024x768	HD - 1366x 768 (wide screen)	WSVGA - 1024x 600 (wide screen)
Touch Screen	Multitouch (PCAP)	Multitouch (PCAP)	Single touch (Resistive 5 wires)	Single touch (Resistive 5 wires)	Single touch (Resistive 5 wires)
CPU	Intel core I5-6500 quad core 3,2GHz	Intel pentium Silver J5005 1,5 - 2,4GHz	AMD Embedded GX-424CC - 2,4GHz	Intel J1900 quad core - 2,0GHz	Intel J1900 quad core - 2,0GHz
CPU frequency	3,2GHz	2,4GHz	2,4GHz	2GHz	2GHz
Dynamic RAM	8 Gbytes DDR4	4GBytes DDR3	4GBytes DDR3	4GBytes DDR3	4GBytes DDR3
Graphic controller	Integrated Intel HD graphics (HD510/530)	Integrated Intel® UHD 605 18EUs	Integrated AMD Radeon™ R5E	Intel® HD Graphics	Intel® HD Graphics
Hard Disk	64GB Msata	64GB Msata	64GB Msata	64GB Msata	64GB Msata
Ethernet ports	2 x 10/100/1000Mbit Ethernet	2 x 10/100/1000Mbit Ethernet	2 x 10/100/1000Mbit Ethernet	2 x 10/100/1000Mbit Ethernet	2 x 10/100/1000Mbit Ethernet
Serial ports	1 x RS232	2 x Rs232	2 x RS232	1 x RS232	1 x RS232
External Video	1 x DVI D 2 x Display Port V1.2	1 x DVI I 1 x Display Port V1.2	1 x DVI I 1 x Display Port V1.2	1 x VGA 1 x HDMI	1 x VGA 1 x HDMI
PS2 Mouse/Keyboard	Yes	Yes	Yes	No	No
USB ports	4 x USB 2.0 4 x USB 3.0	4 x USB 2.0	4 X USB 2.0	1 x USB 2.0 1 x USB 3.0	1 x USB 2.0 1 x USB 3.0
Operative system	Windows® 10 IOT Enterprise 2016	Windows® 10 IOT Enterprise 2016	Windows® 10 IOT Enterprise 2016	Windows® 10 IOT Enterprise 2016	Windows® 10 IOT Enterprise 2016
Power supply	24Vdd +/- 20% - 100W	24Vdd +/- 20% - 70W	24Vdd +/- 20% - 70W	12Vdd - 50W External power supply input 110-240Vac, output 12V - 60W enclosed	12Vdd - 50W External power supply input 110-240Vac, output 12V - 60W enclosed
Dimensions (H x L x P) [mm]	526,0 x 317,6 x 57,1	466,4 x 391,0 x 71,1	466,4 x 391,0 x 66,6	121,1 x 270,7 x 66	283,6 x 186,0 x 46,6
Working temperature	+5/+40	+5/+40	+5/+40	+5/+40	+5/+40
Marks	CE	CE	CE	CE	CE

Technical Specifications

MODEL	S 500 Rack	S 510	S 640-C-G	S 630-C-G	S 625-C-G
Display	None **	12" Color TFT LCD	15,6" Color TFT LCD	10,1" Color TFT LCD	7" Color TFT LCD
Display Resolution	None **	SVGA - 800x 600	WSVGA - 1366x768 (widescreen)	WSVGA - 1024x 600 (widescreen)	WVGA - 800 x 480
Touch Screen	None **	No	Resisitive Single touch	Resisitive Single touch	Resisitive Single touch
CPU / Dynamic RAM	VIA Eden® X1 1.06GHz 1GBytes	VIA Eden® X1 1.06GHz 1GBytes	VIA Eden® X1 1.06GHz 1GBytes	VIA Eden® X1 1.06GHz 1GBytes	VIA Eden® X1 1.06GHz 1GBytes
Graphic controller	Integrated VIA Chrome®9 HD DX9	Integrated VIA Chrome®9 HD DX9	Integrated VIA Chrome®9 HD DX9	Integrated VIA Chrome®9 HD DX9	Integrated VIA Chrome®9 HD DX9
Solid State Disk	128MBytes	128MBytes	128MBytes	128MBytes	128MBytes
Battery backupped RAM	1MBytes (Lithium battery CR 2032)	1MBytes (Lithium battery CR 2032)	1MBytes (Lithium battery CR 2032)	1MBytes (Lithium battery CR 2032)	1MBytes (Lithium battery CR 2450)
FLASH memory	8MBytes	NO	NO	NO	NO
Ethernet ports	1 x 10/100Mbit 1 x 10/100Mbit optional	1 x 10/100Mbit	1 x 10/100Mbit	1 x 10/100Mbit	1 x 10/100Mbit
Serial Ports	2 x RS-232/RS-422	2 x RS-232	2 x RS-232	2 x RS-232	2 x RS-232
External VGA output	Yes	Yes	Yes	Yes	NO
Additional QWERTY keyboard and mouse	Yes	Yes	Yes	Yes	NO
USB Ports	2 x USB 2.0	3 x USB 2.0	2 x USB 2.0	2 x USB 2.0	1 x USB 2.0
Operative System	ETS real time Windows compatible	ETS real time Windows compatible	ETS real time Windows compatible	ETS real time Windows compatible	ETS real time Windows compatible
Axes number	Max 156	Max 6	Max 6	Max 4	Max 3
Analog axes management	Max 8 Available an expansion module	Onboard 4 x 14Bit, +/-10V analog outputs 4 x NPN/Push Pull/Line Drive 5V Encoders	Onboard 4 x 14Bit, +/-10V analog outputs 4 x NPN/Push Pull/Line Drive 5V Encoders	Onboard 4 x 14Bit, +/-10V analog outputs 4 x NPN/Push Pull/Line Drive 5V Encoders	Onboard 4 x 14Bit, +/-10V analog outputs 4 x NPN/Push Pull/Line Drive 5V Encoders
Can-Open axes	2 x CANopen DS3101	1 x CANopen DS3101	1 x CANopen DS3101	1 x CANopen DS3101	1 x CANopen DS3101
Analog inputs	4 x 12Bit resolution (0-5V, 0-10V)	4 x 12Bit resolution (0-5V, 0-10V)	4 x 12Bit resolution (0-5V, 0-10V)	4 x 12Bit resolution (0-5V, 0-10V)	3 x 12Bit resolution (0-10V)
Analog outputs	1 x 12Bit Resolution (0-10V)	2 x 12Bit Resolution (0-10V)	2 x 12Bit Resolution (0-10V)	2 x 12Bit Resolution (0-10V)	2 x 12Bit Resolution (0-10V)
Fast inputs	4 x 24V PNP	No	No	No	No

Specifications

MODEL	S 500 Rack	S 510	S 640-C-G	S 630-C-G	S 625-C-G
Local digital inputs	Max 64 Available on expansion module	32 x 24V PNP	32 x 24V PNP	32 x 24V PNP	16 x 24V PNP
Local digital outputs	Max 64 Available on expansion module	32 x 24V PNP - 0,7A	32 x 24V PNP - 0,7A	32 x 24V PNP - 0,7A	8 x 24V PNP - 1,2A 4 x 24V PNP - 2,2A
I/O remote ESAring interface	Max512 Digital Inputs Max 512 Digital Outputs Max 8 Analog Inputs, 2msec refresh Max 8 Analog Outputs, 2msec refresh Max 8 Analog Axes	Max 64 Digital Inputs Max 64 Digital Outputs Max 8 Analog Inputs, 2msec refresh Max 8 Analog Outputs, 2msec refresh Max 2 Analog Axes	Max 64 Digital Inputs Max 64 Digital Outputs Max 8 Analog Inputs, 2msec refresh Max 8 Analog Outputs, 2msec refresh Max 2 Analog Axes	Max 64 Digital Inputs Max 64 Digital Outputs Max 8 Analog Inputs, 2msec refresh Max 8 Analog Outputs, 2msec refresh Max 2 Analog Axes	No
PC104 connector	1	NO	NO	NO	NO
Telecomunication assistance	Optional	Optional	Optional	Optional	Optional
Application for waterjet and plasma-oxygen cutting	Yes	Yes	Yes	Yes	Yes
Application for marble and glass working	Yes	Yes	Yes	Yes	Yes
Application for laser working	Yes	Yes	Yes	Yes	Yes
Application for wood working	Yes	Yes	Yes	Yes	Yes
Work piece 2D graphic	Yes	Yes	Yes	Yes	Yes
S500 PC software offline	Yes	Yes	Yes	Yes	Yes
Machine parameters compatibility	Yes	Yes	Yes	Yes	Yes
Numeric work piece programs compatibility	Yes	Yes	Yes	Yes	Yes
Open PLC	Yes	Yes	Yes	Yes	Yes
Power supply	24Vdd +/- 20% - 60W	24Vdd +/- 20% - 50W	24Vdd +/- 20% - 50W	24Vdd +/- 20% - 50W	24Vdd +/- 20% - 50W
Dimensions (H x L x P) [mm]	342,0 x 55,5 x 164,5	157,5 x 220,5 x 45,7	350,0 x 420,0 x 43,6	310 x 466,4 x 46,1	242,0 x 342,0 x 35,6
Temperature working range	+5 - +50 C	+5 - +50 C	+5 - +50 C	+5 - +50 C	+5 - +50 C
Marks	CE	CE	CE	CE	CE

** Features are determinated by the industrial PC connected to the Rack CNC

** Features are determinated by the industrial PC connected to the Rack CNC

Bi-rotary Head

Bi-rotary Head

From years of experience in the management of 5-axis machines for thermal cutting and waterjet, and from the collaboration with leading international manufactures, was born the project of the bi-rotary head Esautomotion 5AX.

Designed to reconcile the demands of precision and reducing the costs of the new machines, the 5AX bi-rotary head encompasses the following advantages.

- High accuracy and repeatability thanks to the adoption of high precision bearings and to the full digital Esautomotion Dmotion motorization

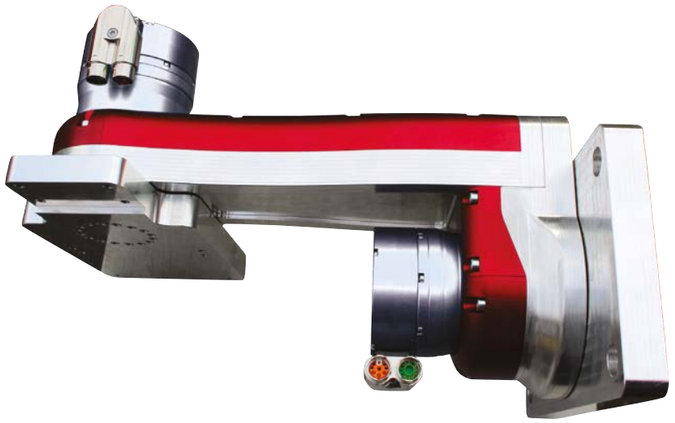

- Limited Weight (about 12,5 Kg) that permits to have a machine highly dinamic

- Reduced overall dimensions to avoid blind spots

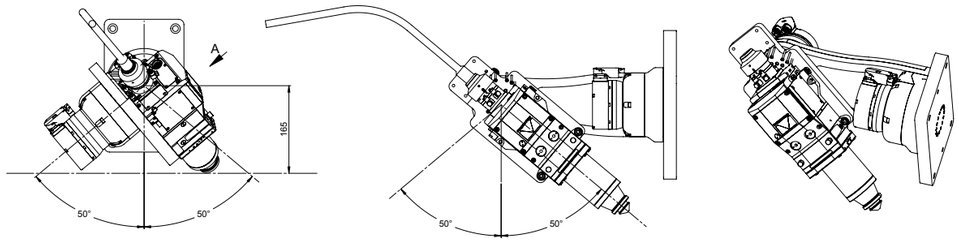

- RTCP Management thanks to the sophisticated algorithms of CNC Esautomotion that allows (i.e.) changing the kerf without having to reprocess the part program using the Cad Cam.

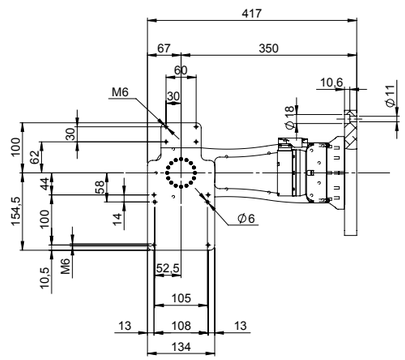

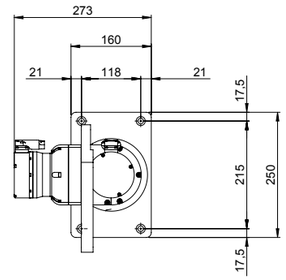

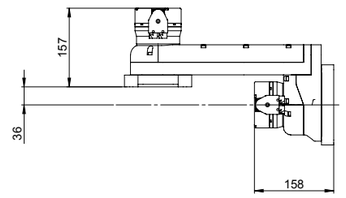

Technical specifications

	B AXE	A AXE
Servomotors	Esautomotion Digital E Series	Esautomotion Digital E Series
Bevelling angle max	50°	50°
Max Speed	120 rpm/min	120 rpm/min
Transmission accuracy (arcmin)	<1,5	<1,5
Repeatability (arcmin)	1	1
Weight	12,5 Kg	
Engine types	230 VAC 400 VAC	230 VAC 400 VAC

Esautomotion S.p.A.
Sede legale e operativa:
via della Meccanica, 23/1 • 41012 Carpi (MO) • Italy
tel. +39 059 851414 • fax +39 059 851313
www.esautomotion.com
P.iva e C.F. 07623420960 • Cap. Soc. € 2.000.000,00 i.v.

Rack Mounted

Disponibili solo per la versione S 500 Rack

- Modulo 4 assi analogici - Codice BRD.021.461
  4 circuiti di conteggio veloce /frequenza massima 2MHz) per encoder differenziali Line Drive 0-5Vdc. È prevista l'alimentazione diretta degli encoder (max 200mA a canale) esclusivamente a 5Vdc. Sono rilevati e segnalati l'interruzione del cavo e l'eventuale allarme trasduttore.
  4 uscite analogiche ± 10V con risoluzione 15 bit + segno
  4 ingressi digitali per i micro di zero
  4 ingressi per la memorizzazione istantanea delle quote degli assi (touch probe); il fronte attivo è impostabile.

- Modulo 32 Ingressi + 32 Uscite Digitali - Cod. BRD.007.461
  Gli ingressi e le uscite sono localizzati su 4 morsettiere rimovibili passo 3,5 mm. Caratteristiche Input: Optoisolati - range lavoro 20÷28Vdc - Filtro HW10ms. Caratteristiche Output: 0,7A max - range lavoro 20÷28Vdc protetti termicamente dal sovraccarico e corto circuito.

- Modulo PWM - Codice BRD.019.483
  Modulo specifico per applicazioni taglio laser, è utilizzato per la regolazione della potenza di taglio. Si interfaccia al generatore laser attraverso le seguenti uscite:
  1 uscita PWM 5/24Vdc push pull, 10Khz / 5V Line Driver 50KHz
  1 uscita FLYCUT push-pull
  3 uscite analogica 0'10V risoluzione 12Bit

Available only for S 500 Rack

- *4 Analog axes module - part code BRD.021.461*
  4 fast counting circuits (maximum frequency 2MHz) for Line Drive 0-5Vdc differential encoders.
  The encoders are directly powered at 5Vdc (max 200 mA channel). Cable breaking and transducer alarm status are detected and signalled.
  4 ± 10V analog outputs with 15 bits + sign resolution.
  4 digital inputs for the zero micros.
  4 inputs for instantly memorizing the axes targets (touch probe). The active front setting can be selected.

- *32 digital Inputs + 32 Digital Outputs - part code BRD.007.461*
  Both the inputs and the outputs are located on 4 removable terminal boards with 3.5 mm pitch. Input specifications: optoinsulated; operating range 20÷28 Vdc - 10 ms HW filter. Output specifications: 0.7A maximum; operating range 20 to 28Vdc, thermally protected against overloads and shorts-circuit.

- *PWM module - part code BRD.019.483*
  Specific module for laser cutting applications, it is used for the regulation of cutting power. It interfaces to the laser generator through the following outputs:
  1 PWM 5/24Vdc push pull, 10Khz output / 5V Line Driver 50KHz
  1 uscita FLYCUT push-pull
  3 uscite analogica 0'10V risoluzione 12Bit

** Features are determinated by the industrial PC connected to the Rack CNC

Expansion modules

I/O boards via I/O link bus (optic fiber)

Scheda altezza Torcia Plasma

- Codice BRD.007.435

1 ingresso Alta Tensione 0-400Vdc – Risoluzione 12Bit
3 ingressi digitali 24V PNP
1 ingresso PROBE per funzioni di tastatura
4 uscite relè 220Vdc/250Vac – 60W
1 uscita per relè ad alta tensione esterno

I/O Stand alone

- Codice BRD.021.405

2 assi analogici di impianto.
Frequenza max conteggio encoder 200KHz.
Uscita analogica con risoluzione 11 bit + segno.
Alimentazione encoder 5Vdc.

- Codice BRD.007.450

16 ingressi + 16 Uscite digitali.
Ingressi con filtro HW da 10 msec.
Uscite protette da 1A.

- Codice BRD.019.461

Modulo Console Macchina in grado di gestire:
16 ingressi digitali 24Vdc, 8 uscite digitali 24Vdc,
3 ingressi analogici 0'10V, 12 Bit,
1 encoder line driver differenziale 0-5V.

I/O Modulare

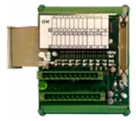

(richiede BRD.019.025)

- Codice BRD.007.454

16 Uscite digitali 24Vdc, protette contro corto e sovraccarico, 1A max.

- Codice BRD.007.458

16 Ingressi digitali 24Vdc, protette contro l'inversione, con filtro HW DA 10 msec.

- Codice BRD.018.401

8 Ingressi analogici, configurabili in tensione/corrente, risoluzione 12 bit, +10Vdc, 40 mA per alimentazione sensori
Max frequenza di rinfresco 5KHz

- Codice BRD.018.402

8 Uscite analogiche optoisolate +/-10V,
Risoluzione 15bit + segno
Max frequenza rinfresco per canale 6,5KHz

*per maggiori informazioni fare riferimento al sito www.esautomotion.com

** Features are determinated by the industrial PC connected to the Rack CNC

Torch management module

- *Part code BRD.007.435*
  1 High voltage input 0-400Vdc - 12Bit Resolution
  3 Digital inputs 24V PNP
  1 Probe input
  4 Relay outputs 220Vdc/250Vac - 60W
  1 Output for external high voltage relay

I/O Stand alone

- *Part code BRD.021.405*
  2 analog system axes;
  max encoder count frequency 200 KHz;
  analog output with 11 bits + sign resolution;
  5Vdc encoder power supply.
- *Part code BRD.007.450*
  16 digital inputs + 16 digital outputs.
  Inputs with 10 msec HW filter, 1A protected outputs.
- *Part code BRD.019.461*
  Console machine module able to control:
  16 digital input 24Vdc, 8 digital output 24 Vdc,
  3 analog input 0-10V 12Bit,
  1 differential line driver 0-5V encoder.

I/O Modulare (requires BRD.019.025)

- *Part code BRD.007.454*
  16 digital outputs (24 Vdc) protected against short-circuits and overload, max 1A.
- *Part code BRD.007.458*
  16 digital inputs 24 Vdc protected against reversal, with 10 msec HW filter.
- *Part code BRD.018.401*
  8 analog inputs, configurable in voltage/current
  12 bits resolution,
  +10 Vdc 40 mA sensor power supply;
  refresh frequency max. 5 KHz.
- *Part code BRD.018.402*
  8 optoinsulated analog outputs (± 10 V),
  15 bits resolution + sign
  6.5KHz refresh frequency per channel.

**For more information please visit www.esautomotion.com*

Expansion modules

EtherCat Interface

Sul canale in dotazione possono essere collegati sia dispositivi di I/O che Assi:

- Drive Serie EBS
  Tutta la gamma di drive EBS è disponibile con interfaccia EtherCat
- Modulo 16 Ingressi + 16 Uscite Digitali - Codice BRD.007.452
  16 ingressi PNP optoisolati 24Vdc
  16 uscite PNP optoisolate 24Vdc - 0,7A
- Modulo 16 Ingressi + 16 Uscite
  + 1 ingresso analogico - BRD.007.453
  16 ingressi PNP optoisolati 24Vdc
  16 uscite PNP optoisolate 24Vdc - 1,2A
  1 ingresso analogico 0 - 5V risoluzione 12 Bit
  Modulo con protezione IP67
- Modulo multifunzione - Codice BRD .019.462
  32 ingressi PNP optoisolati 24Vdc
  32 uscite PNP optoisolate 24Vdc - 1,2A
  8 ingressi analogici 0 - 5V risoluzione 12 Bit
  1 ingresso da encoder differenziale 5V AB0 per volantino

Both I/O devices and axes can be connected to the channels supplied:

- *EBS Servo drive*
  The whole range of EBS drives is available with EtherCat interface
- *16 digital inputs + 16 Digital outputs - Part code BRD.007.452*
  16 Optoisolated digital inputs PNP - 24Vdc
  16 Optoisolated digital outputs PNP - 24Vdc - 0,7A
- *16 Digital inputs + 16 Digital outputs*
  + 1 analog input - BRD.007.453
  16 Optoisolated digital inputs PNP - 24Vdc
  16 Optoisolated digital outputs PNP - 24Vdc - 0,7A
  1 Analog input 0 - 5V 12Bit resolution
  Ip67 Module
- *Multifunctions Module - Part code BRD .019.462*
  32 Optoisolated digital inputs PNP - 24Vdc
  1 6 Optoisolated digital outputs PNP - 24Vdc - 0,7A
  8 Analog input 0 - 5V 12Bit resolution
  1 Differential line driver 5Vdc encoder - AB0 for handwheel

BRD.007.452

Can Bus Interface

Su entrambi i canali in dotazione possono essere collegati sia dispositivi di I/O che assi. Il protocollo utilizzato è il CANOpen DS301, comprensivo delle principali funzioni motion del device profile DSP402v2.0. La presenza di 2 canali autonomi consente una corretta distribuzione dei dispositivi in funzione sia dei tempi di campionamento richiesti, sia della lunghezza del ring stesso. Problematiche tipiche di applicazioni con motori con drive integrato (CAN) quali ad esempio i servomotori Esautomotion serie ED e drives serie EBS.

Both I/O devices and axes can be connected to both channels supplied. The protocol used is CANOpen DS301, inclusive of the main motion functions of device profile DSP402v2.0.
Since 2 self-contained channels are available, the devices can be distributed correctly to suit both the sampling times required and the length of the ring itself.
Problems typical of applications with integrated drive motors (CAN), such as Esautomotion's ED Series servomotors and EBS drives, for example.

Digital axes interfaces

Disponibili solo per la versione S 500 Rack

Sono supportati, tramite apposite schede in formato PC 104, i seguenti protocolli digitali:
- SERCOS - Codice BRD.019.498
- MECHATROLINK I e II(Yaskawa) - Codice BRD.019.421

Available only for S 500 Rack

Boards in the PC104 format are available for the following digital protocols:
- SERCOS - code BRD.019.498
- MECHATROLINK I e II (Yaskawa) - code BRD.019.421

General layout of the interconnections

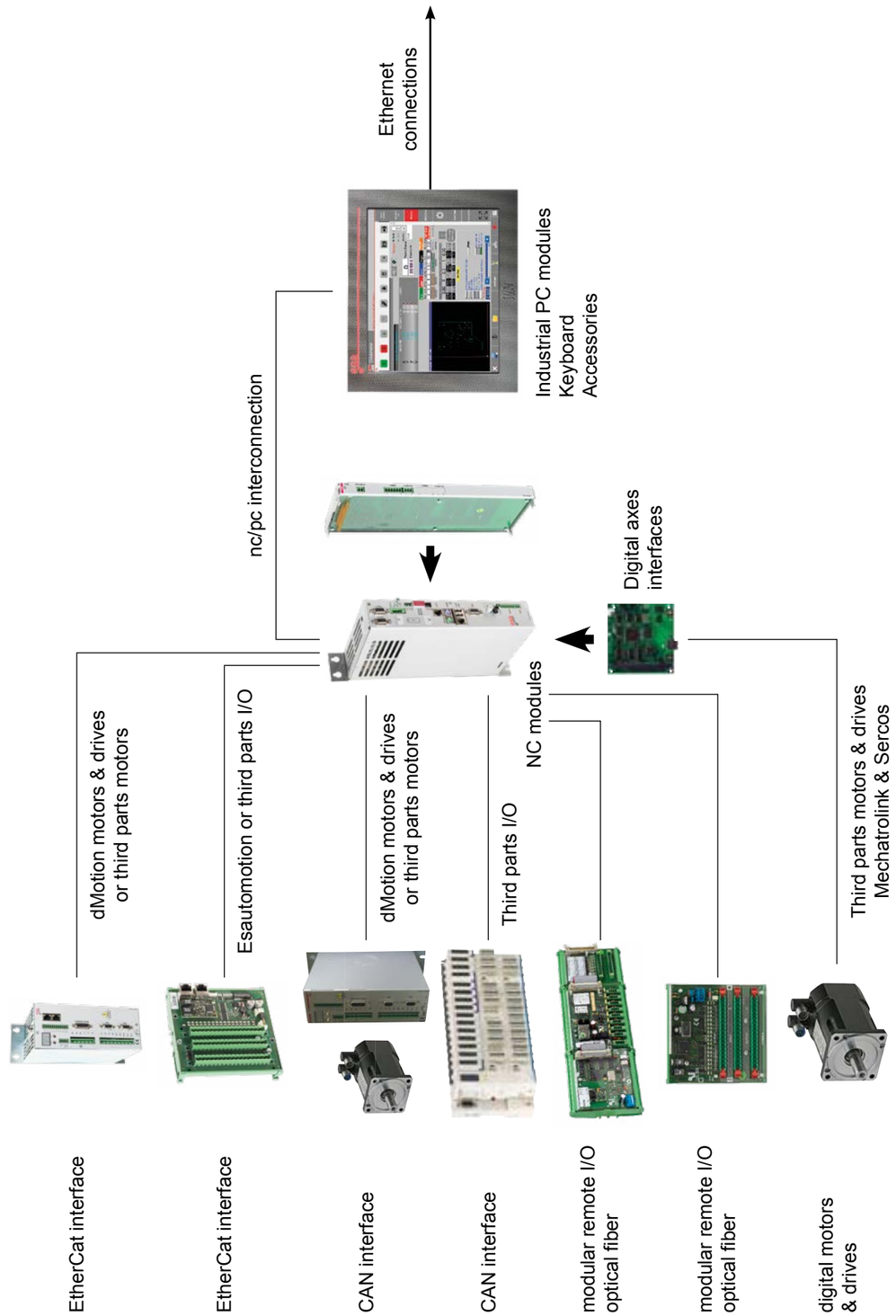

EBS Servodrives

DRIVE EBS

Questi drive sono stati sviluppati per realizzare una totale integrazione digitale con i CNC Esautomotion tramite bus di campo standard quali CAN open ed EtherCAT.
La gamma comprende cinque taglie principali: EBS3, EBS6, EBS18, EBS30, EBS42.
L'alimentazione è diretta da rete (220V-400V AC trifase).
Ogni convertitore è dotato di resistenza di frenatura interna, ad eccezione dai modelli EBS30 ed EBS42. Su tutti i modelli è possibile montare una resistenza di frenatura esterna. Per questi drives è richiesta un'alimentazione di servizio di 24Vdc (-15+ 20%).

CARATTERISTICHE PRINCIPALI DEGLI EBS

- Possibilità di gestire due schede opzionali (feedback, fieldbus, I/O expansion, ecc..)
- Gestione di 5 ingessi e 3 uscite digitali programmabili
- Gestione di trasduttori di tipo TTL + sensori HALL, ABS, 17 birs.
- Regolazione, di tipo vettoriale, realizzata tramite un DSP di ultima generazione. All'interno del drive sono "chiusi" l'anello di corrente e di velocità con un cycle time rispettivamente di 62,5 e 250 microsecondi
- Gestione automatica del freno elettromeccanico, con protezioni di mancanza freno e di sovracorrente circuito freno
- Implementazione delle seguenti protezioni:
  - Sovracorrente convertitore
  - I2t IGBT e motore con soglia di preallarme e allarme.
  - Anomalie circuito di frenatura
  - Anomalia circuito freno elettromeccanico
  - Rottura/sconnessione encoders
  - Sovra-velocità motore

EBS DRIVES

These drives have been designed to achieve total digital integration with Esautomotio's CNCs, using standard fieldbuses such as open CAN and EtherCAT.
The complete range includes five main sizes: EBS3, EBS6, EBS12 EBS30, EBS 42.
They are powered straight from the mains (220 V - 400 Vac threephase).
Each converter is equipped with an internal brake resistance with the exception of models EBS30 and EBS42. An external brake resistance can also be installed. 24Vdc (-15+ 20%) power is required for these drives.

MAIN FEATURES OF THE EBS DRIVES

- *Two optional boards can be controlled (feedback, fieldbus, I/O expansion, etc..).*
- *Management of 5 inputs and 3 outputs of the programmable digital type.*
- *Management of TTL + HALL sensor,* ABS, 17 birs. *transducer.*
- *Vectorial regulation is achieved by means of a latest generation DSP. The current loop and speed are "enclosed" in the drive with a cycle time of 62.5 and 250 microseconds, respectively.*
- *Automatic control of the electromechanical brake, with protection against brake failure and brake circuit overcurrent.*
- *The following protections are implemented:*
  - *Converter overcurrent.*
  - *I2t IGBT and motor with pre-alarm and alarm threshold.*
  - *Faulty brake circuit.*
  - *Faulty electromechanical brake circuit.*
  - *Breakage/disconnection of encoders.*
  - *Motor overspeed*

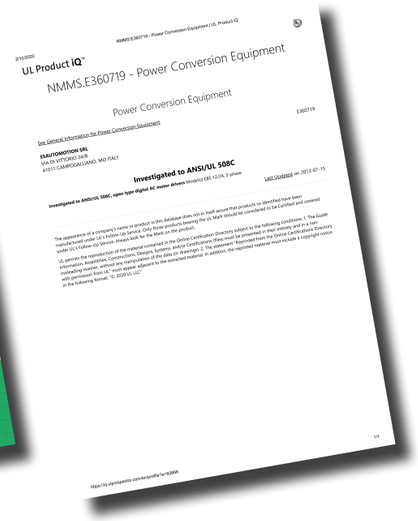

Technical Data

Modello / *Model*		EBS3/6	EBS6/12	EBS12/24	EBS18/36	EBS30/60	EBS42/84
Output current	Arms	3 cont 6 x 5 sec	6 cont 12 x 5 sec	12 cont 24 x 5 sec	17 cont 34 x 5 sec	30 cont 60 x 5 sec	42 cont 84 x 5 sec
Dimensions (L x H x D)	mm	66 x 265 x 164,5		86 x 265 x 164,5		169 x 360 x 232,3	
Threephase pwer supplì voltage rating	Vac	230±10% / 400±10%					
Bus DC rated voltage	Vda	320±10% / 566±10%					
Suppliable steady current	A	3	6	12	17	30	42
Peak current (Max 5s)	A	6	12	24	34	60	84
Capacity of BUS condensator	uF	235	235	500	500	1230	1500
Rated power output	KW	1,29	2,59	5,74	8,13	14,3	20,1
Auxiliary power supplì	Vdc	24 +15% / -10%					
Current Input at +24Vdc (brake excluded)	A	0,4	0,4	0,4	0,4	0,6	0,6
Power dissipated by drive in rated condition (400Vac)	W	50	80	150	200	350	500
Max continuous braking power on internal resistor	W	25		50		N.A.*	
Max continuous braking power on internal resistor	KW	5		10		N.A.*	
Max continuous braking power on external resistor	W	1000		1500		5000	
Internal resistor value	Ω	100		50		N.A.*	
External resistor value	Ω	>66		>33		>12,5	
Tripping voltage of brake circuit	V	390 / 720					

N.A.* Not available

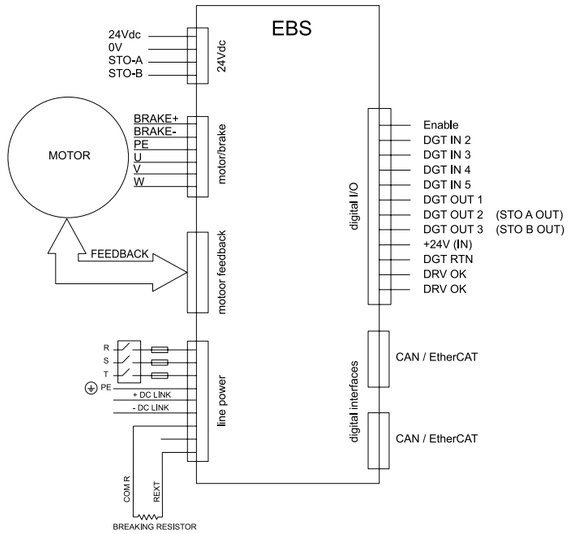

E 060 Motors

E 085 Motors

E 115 Motors

E 142 Motors

E 190 Motors

E260 Motors

ED3/ED4 60 Motors

ED3/ED4 85 Motors

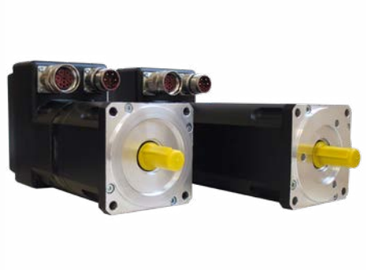

ED3/ED4 115 Motors

Square 60 mm Motors

Electrical Characteristics		E-060-60-007	E-060-60-014
Stall Torque ΔT= 100 °C - T_0	Nm	0,7	1,4
Max velocity - N_{max}	rpm	6000	6000
Nominal Current - I_N	Arms	0,9	1,6
Nominal Torque - T_N	Nm	0,65	1,3
Max Current - I_{max}	Arms	4	7
Max Torque - T_{max}	Nm	2,5	4,9
Voltage Constant - K_E	V/Krpm	44	49
Torque Constant - K_T	Nm/A	0,73	0,82
Rotor Inertia - J_R	gm^2	0,013	0,023
Max velocity at T_{max} - N_{max1}	rpm	4100	4600
Max Torque at N_{max} - T_1	Nm	1,3	2,1
Nominal power – PN	W	200	400
Weight without brake - M	Kg	1,2	1,7

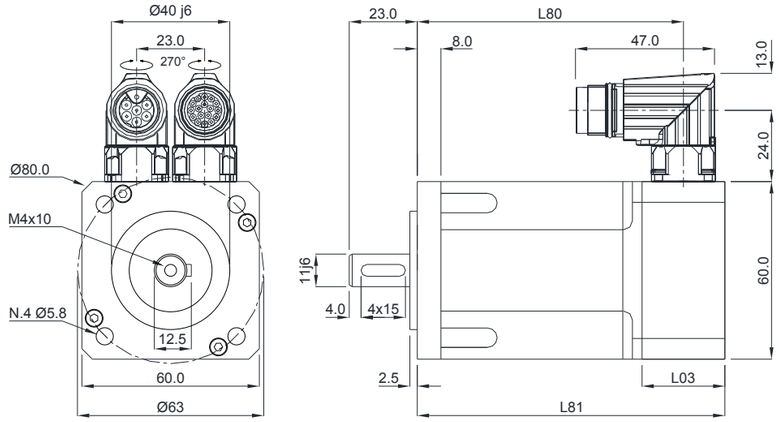

Motor's Lengths		E-060-60-007		E-060-60-014	
		TTL2048 Hip SEL37 Smart ABS	Hiperface. SKM36	TTL2048 Hip SEL37 Smart ABS	Hiperface. SKM36
L80 without brake	mm	90	104	118	132
L81 without brake	mm	104	118	132	146
L80 with brake	mm	120,4	134,4	148,4	162,4
L81 with brake	mm	134,5	148,4	162,4	176,4
L03	mm	28	42	28	42

Brake Characteristics		
Supply Voltage	Vdc	24 +/- 6% @ 0,46Adc
Braking Torque	Nm	1,8
Inertia	gm^2	0,1
Weight	Kg	0,3
Ton/Toff	ms	6/25

E Motors

Square 85 mm Motors

Electrical Characteristics		E-085-50-010	E-085-35-015	E-085-60-015	E-085-35-029	E-085-60-029	E-085-35-042	E-085-60-042	E-085-30-053	E-085-50-053
Stall Torque ΔT= 100 °C - T_0	Nm	1	1,5		2,9		4,2		5,3	
Max velocity - N_{max}	rpm	5000	3500	5800	3500	5800	3500	5800	3000	5000
Nominal Current - I_N	Arms	1	0,9	1,4	1,7	2,6	2,3	3,6	2,6	4,4
Nominal Torque - T_N	Nm	0,9	1,3		2,4		3,3		4	
Max Current - I_{max}	Arms	4,5	4	6,6	8	13	12	19	15	24
Max Torque - T_{max}	Nm	3,6	4,8	5,1	10	10	14	14	18	18
Voltage Constant - K_E	V/Krpm	56	86	55	88	55	88	55	93	55
Torque Constant - K_T	Nm/A	0,93	1,42	0,91	1,45	0,91	1,45	0,91	1,54	0,91
Rotor Inertia - J_R	gm^2	0,07	0,092		0,172		0,253		0,333	
Max velocity at T_{max} - N_{max1}	rpm	3500	2300	4000	2500	4400	2600	4600	2400	4650
Max Torque at N_{max} - T_1	Nm	1,6	1,2	0,6	2,4	1,3	3,8	2,4	11,6	16,7
Nominal power - PN	W	280	400		700		1000		1200	
Weight without brake - M	Kg	2	2,4		3,5		4,6		5,7	

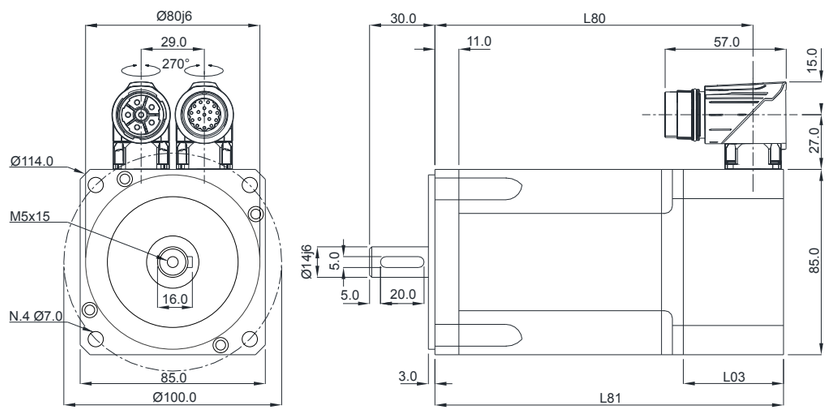

Motor's Lengths		E-085-50-010		E-085-xx-015		E-085-xx-029		E-085-xx-042		E-085-xx-053	
		TTL 2048 Smart ABS	Hip SKM36 Hip. SRM50	TTL 2048 Smart ABS	Hip SKM36 Hip. SRM50	TTL 2048 Smart ABS	Hip SKM36 Hip. SRM50	TTL 2048 Smart ABS	Hip SKM36 Hip. SRM50	TTL 2048 Smart ABS	Hip SKM36 Hip. SRM50
L80 without brake	mm	73,5	83,5	101	116	131	146	161	176	191	206
L81 without brake	mm	87	107	115	130	145	160	175	190	205	220
L80 with brake	mm	101,5	111,5	149	164	179	194	209	224	239	254
L81 with brake	mm	115	135	163	178	193	208	223	238	253	268
L03	mm	26	46	31	46	31	46	31	46	31	46

Brake Characteristics		E-085-50-010	E-085-xx-015	E-085-xx-029	E-085-xx-042	E-085-xx-053
Supply Voltage	Vdc	24 +/- 6% @ 0,46Adc	24 +/- 6% @ 0,67Adc			
Braking Torque	Nm	1,8	11			
Inertia	gm^2	0,1	0,106			
Weight	Kg	0,25	0,6			
Ton/Toff	ms	6/10	19/29			

Square 115 mm Motors

Electrical Characteristics		E-115-50-021	E-115-30-040	E-115-60-040	E-115-30-076	E-115-50-076	E-115-60-076	E-115-30-113	E-115-50-113	E-115-60-113
Stall Torque ΔT= 100 °C - T_0	Nm	2,1	4		7,6			11,3		
Max velocity - N_{max}	rpm	5000	3000	5800	3000	5000	5500	3000	5000	6000
Nominal Current - I_N	Arms	1,8	2,3	3,5	3,3	5,5	5,5	4,8	7,9	11,3
Nominal Torque - T_N	Nm	1,8	3,2		5,4			7,6		
Max Current - I_{max}	Arms	8	10	18	19	31	31	28	47	68
Max Torque - T_{max}	Nm	6,9	14	14	26	26	26	39	40	39
Voltage Constant - K_E	V/Krpm	61	96	55	98	59	59	98	59	41
Torque Constant - K_T	Nm/A	1	1,59	0,91	1,62	0,98	0,98	1,62	0,98	0,68
Rotor Inertia - J_R	gm^2	0,28	0,5		0,96			1,4		
Max velocity at T_{max} - N_{max1}	rpm	3400	2300	4350	2500	4400	4400	2600	4650	6000
Max Torque at N_{max} - T_1	Nm	1,7	6,2	1,9	13,1	16,6	16,6	22,2	30,9	39
Nominal power - PN	W	570	1000		1700			2400		
Weight without brake - M	Kg	3,6	5,6		8,5			11,4		

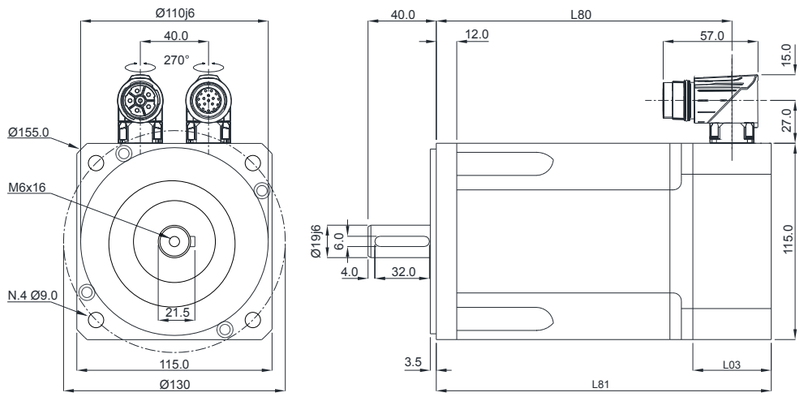

Motor's Lengths		E-115-50-021		E-115-xx-040		E-115-xx-076		E-115-xx-113	
		TTL 2048 Smart ABS	Hip SKM36 Hip. SRM50	TTL 2048 Smart ABS	Hip SKM36 Hip. SRM50	TTL 2048 Smart ABS	Hip SKM36 Hip. SRM50	TTL 2048 Smart	Hip SKM36 Hip. SRM50
L80 without brake	mm	80,5	90,5	123,5	137,5	163,5	177,5	203,5	217,5
L81 without brake	mm	94	114	146,5	160,5	186,5	200,5	226,5	240,5
L80 with brake	mm	124	134	172,5	186,5	212,5	226,5	232,5	266,5
L81 with brake	mm	137	157	195,5	209,5	235,5	249,5	275,5	289,5
L03	mm	26	46	32	46	32	46	32	46

Brake Characteristics		E-115-50-021	E-115-xx-040	E-115-xx-076	E-115-xx-113
Supply Voltage	Vdc	24 +/- 6% @ 0,67Adc	24 +/- 6% @ @0,75Adc		
Braking Torque	Nm	11	22		
Inertia	gm^2	0,106	0,36		
Weight	Kg	0,6	1,1		
Ton/Toff	ms	19/29	25/50		

E Motors

Square 142 mm Motors

Electrical Characteristics		E-142-50-050	E-142-30-100	E-142-50-100	E-142-60-100	E-142-30-190	E-142-45-190	E-142-60-190	E-142-30-270	E-142-45-270	E-142-50-270	E-142-30-350	E-142-40-350
Stall Torque ΔT= 100 °C - T_0	Nm	5	10			19			27			35	
Max velocity - N_{max}	rpm	5000	3000	5000	6000	3000	4500	5800	3000	4500	5000	3000	3800
Nominal Current - I_N	Arms	3,3	4,9	7,5	9,4	8	10,3	13,2	10,3	13,9	16,4	13,5	17,2
Nominal Torque - T_N	Nm	3,6	7,6			12,3			18			23,4	
Max Current - I_{max}	Arms	18	26	42	52	50	64	84	62	84	104	80	100
Max Torque - T_{max}	Nm	17	34	36	36	66	65	66	93	93	97	118	119
Voltage Constant - K_E	V/Krpm	66	93	62	49	93	72	56	106	78	66	106	85
Torque Constant - K_T	Nm/A	1,1	1,54	1,02	0,81	1,54	1,19	0,93	1,74	1,3	1,1	1,74	1,36
Rotor Inertia - J_R	gm2	1,2	2,2			4,3			6,5			8,7	
Max velocity at T_{max} - N_{max1}	rpm	3600	2500	4100	5200	2700	3600	4400	2450	3300	4100	2500	2950
Max Torque at N_{max} - T_1	Nm	3	22,6	13,2	23,4	52	3,8	3,7	19,3	32,9	9,9	27,7	11,6
Nominal power - PN	W	1100	2400			3700			3800			4900	
Weight without brake - M	Kg	6	11			16			21			26	

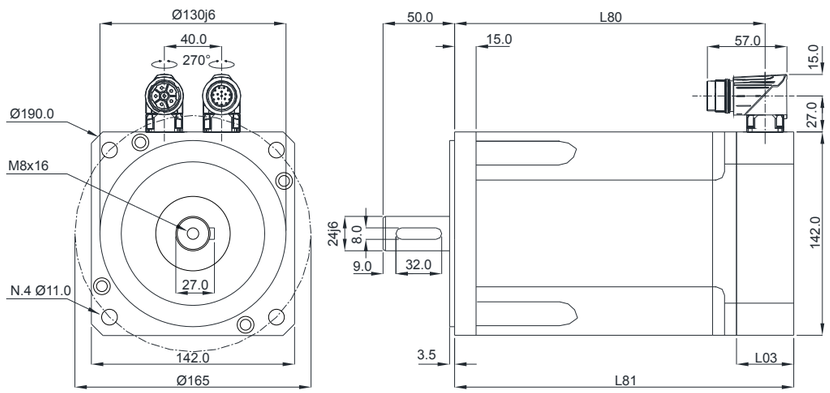

Motor's Lengths		E-142-50-050		E-142-xx-100		E-142-xx-190		E-142-xx-270		E-142-xx-350	
		TTL 2048 Smart ABS	Hip SKM36 Hip. SRM50	TTL 2048 Smart ABS	Hip SKM36 Hip. SRM50	TTL 2048 Smart ABS	Hip SKM36 Hip. SRM50	TTL 2048 Smart ABS	Hip SKM36 Hip. SRM50	TTL 2048 Smart ABS	Hip SKM36 Hip. SRM50
L80 without brake	mm	95	103	154	167	204	217	254	267	304	317
L81 without brake	mm	108,5	124,5	174	187	224	237	274	287	324	337
L80 with brake	mm	134,5	142,5	207,5	220,5	257,5	270,5	307,5	320,5	357,5	370,5
L81 with brake	mm	148	164	227,5	240,5	277,5	290,5	327,5	340,5	377,5	390,5
L03	mm	27	43	27	40	27	40	27	40	27	40

Brake Characteristics		E-142-50-050	E-142-xx-100	E-142-xx-190	E-142-xx-270	E-142-xx-350
Supply Voltage	Vdc	24 +/- 6% @ 0,75Adc	24 +/- 6% @ 1Adc			
Braking Torque	Nm	22	40			
Inertia	gm²	0,36	0,95			
Weight	Kg	1,1	1,4			
Ton/Toff	ms	24/50	25/73			

Square 190 mm Motors

Electrical Characteristics		E-190-40-080	E-190-30-150	E-190-40-150	E-190-25-280	E-190-40-280	E-190-20-500	E-190-30-500	E-190-20-700	E-190-30-700
Stall Torque ΔT= 100 °C - T_0	Nm	8	15		28		50		70	
Max velocity - N_{max}	rpm	4000	3000	4000	2400	4000	1900	3000	2000	3000
Nominal Current - I_N	Arms	5,1	7,2	9,1	8,6	16,2	12,5	19,7	18	26,3
Nominal Torque - T_N	Nm	6,5	12		19		35		47	
Max Current - I_{max}	Arms	18	27	36	38	72	55	84	80	117
Max Torque - T_{max}	Nm	21	38	42	72	72	130	127	184	177
Voltage Constant - K_E	V/Krpm	80	100	79	134	71	169	108	162	108
Torque Constant - K_T	Nm/A	1,32	1,66	1,32	2,22	1,17	2,8	1,78	2,7	1,79
Rotor Inertia - J_R	gm2	2,7	5,4		9,1		17,7		26,4	
Max velocity at T_{max} - N_{max1}	rpm	2800	2550	3350	1950	3450	1700	2700	1800	2700
Max Torque at N_{max} - T_1	Nm	2,2	20,6	12,1	8,8	51,6	25,4	12,2	18,9	21,5
Nominal power - PN	W	2000	3100		4000		5500		7400	
Weight without brake - M	Kg	10	17		23		36		50	

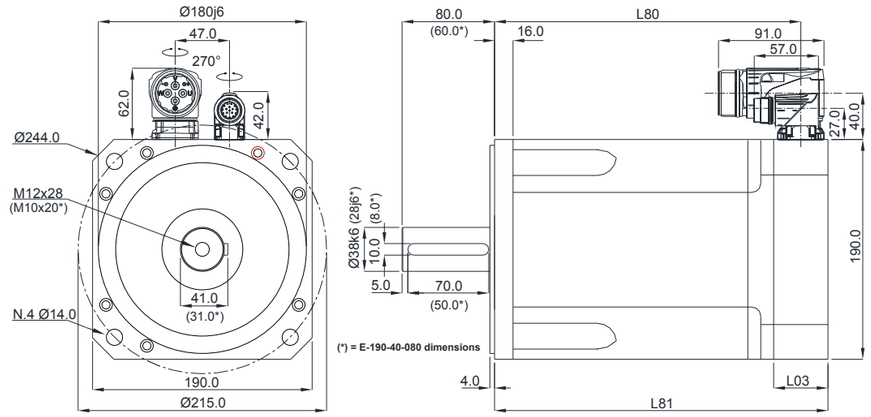

Motor's Lengths		E-190-40-080		E-190-xx-150		E-190-xx-280		E-190-xx-500		E-190-xx-700	
		TTL 2048 Smart ABS	Hip SKM36 Hip. SRM50	TTL 2048 Smart ABS	Hip SKM36 Hip. SRM50	TTL 2048 Smart ABS	Hip SKM36 Hip. SRM50	TTL 2048 Smart ABS	Hip SKM36 Hip. SRM50	TTL 2048 Smart ABS	Hip SKM36 Hip. SRM50
L80 without brake	mm	106,5	116,5	139,5	159,5	174,5	194,5	264,5	264,5	334,5	334,5'
L81 without brake	mm	120	140	163	183	198	218	288	288	358	358
L80 with brake	mm	143,5	153,5	210	230	245	265	335	335	405	405
L81 with brake	mm	157	177	233,5	253,5	268,5	288,5	358,5	358,5	428,5	428,5
L03	mm	27	47	27	47	27	47	47	47	47	47

Brake Characteristics		E-190-40-080	E-190-xx-150	E-190-xx-280	E-190-xx-500	E-190-xx-700
Supply Voltage	Vdc	24 +/- 6% @ 1Adc	24 +/- 6% @ 1,46Adc			
Braking Torque	Nm	40	80			
Inertia	gm²	0,95	3,18			
Weight	Kg	1,4	4,1			
Ton/Toff	ms	25/73	53/97			

E Motors

Square 260 mm Motors

Electrical Characteristics		E-260-12-800	E-260-25-800	E-260-12-1450	E-260-20-1450	E-260-12-2300	E-260-12-800
Stall Torque ΔT= 100 °C - T_0	Nm	80	80	145	145	230	230
Stall Current - io	Arms	25	37	41	70	65	104
Max velocity - N_{max}	rpm	1800	2600	1500	2500	1500	2500
Nominal Current - i_N	Arms	10	15	16	28	26	42
Nominal Torque - T_N	Nm	29	29	56	56	88	88
Max Current - I_{max}	Arms	111	75	210	123	312	195
Max Torque - T_{max}	Nm	283	134	643	220	955	365
Voltage Constant - K_E	V/Krpm	183	126	216	126	216	135
Torque Constant - K_T	Nm/A	3	2,1	3,6	2,1	3,6	2,2
Rotor Inertia - J_R	gm^2	48,4	48,4	94,1	94,1	139,8	139,8 0
Max Torque at N_{max} - T_1	Nm	2,2	20,6	12,1	8,8	51,6	25,4
Weight without brake - M	Kg	50	50	81	81	112	112

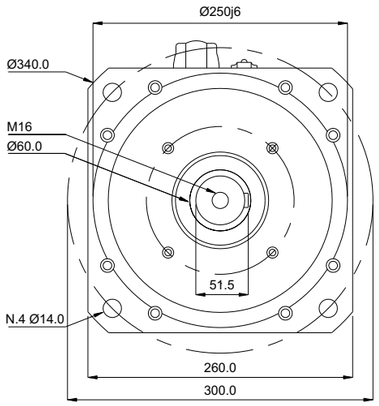

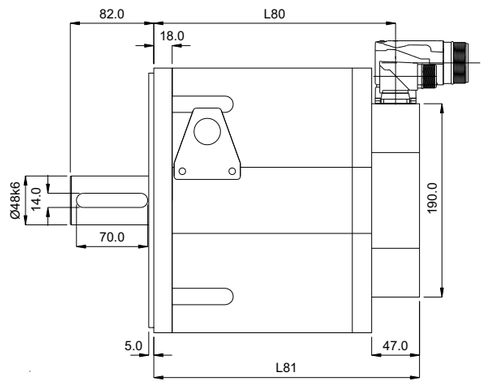

Motor's Lengths		E-260-xxx-800	E-260-xxx-1450	E-260-xxx-2300
L80 without brake	mm	214	294	374
L81 without brake	mm	261	341	421
L80 with brake	mm	267	347	427
L81 with brake	mm	314	394	474

Brake Characteristics		
Supply Voltage	Vdc	24 +/- 6%
Current	A	1,55
Braking Torque	Nm	120
Inertia	gm2	7,9
Wight	Kg	10
Ton/Off	ms	80/150

Rules for a correct interpretation of the Supplied Motors Torque Velocity Data

I dati riportati per ogni motore consentono di tracciare una caratteristica stilizzata che lega la velocità del motore (in rpm) alla coppia da esso erogata (in Nm).

The data supplied with all the motors allows to define a schematic representation of the related Torque / Velocity characteristic inclusive of both continuous and impulsive torque working area.

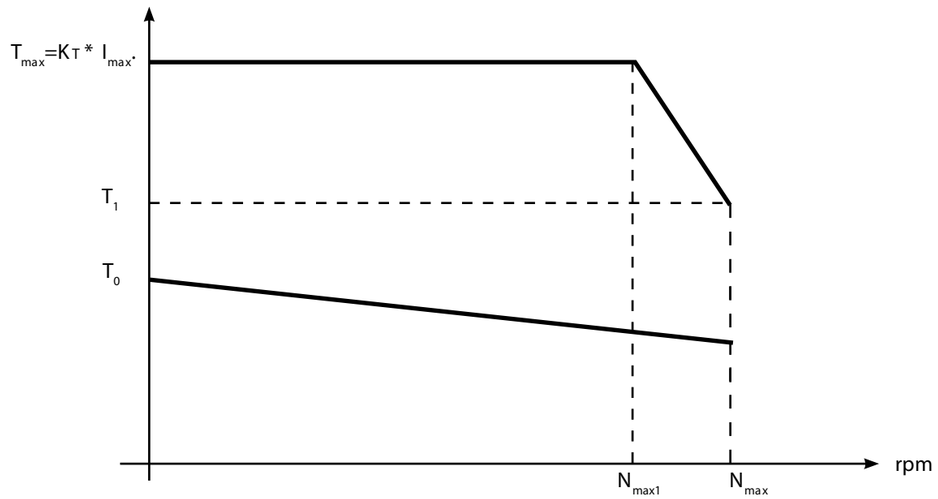

T_0= Coppia di stallo erogata dal motore continuativamente in condizione di rotore pressochè fermo con sovratemperatura sugli avvolgimenti di T=100°C. Valore rilevato con motore in aria con flangia termoisolata.
T_{max} = Coppia massima erogabile dal motore per tempi limitati (in fase di accellerazione) approssimabile con il prodotto KT * I_{max}
T_1= Coppia massima erogata dal motore, per tempi limitati (3-4 sec) alla velocità N_{max}. La limitazione della coppia è dovuta alla tensione massima fornibile dal drive. I dati riportati nelle tabelle sono riferiti ad un drive alimentato a 400VAC trifase.
N_{max1}= Velocità a cui il motore continua ad erogare, per tempi limitati (3-4 sec) e in modo intermittente, la coppia T_{max} . La limitazione della velocità è dovuta alla tensione massima fornibile dal drive. I dati riportati nelle tabelle sono riferiti ad un drive alimentato a 400VAC trifase.
N_{max}= Velocità massima a cui il motore continua ad erogare, per tempi limitati (3-4 sec) e in modo intermittente la coppia T_1.

T_0= Stall torque continuosly supplied by the motor with is rotor pratically still and an over temperature on its winding (respect the environment) of 100°C. This value is measured with the motor in air fixed with a thermo insulated flange.
*Tmax = Max Torque supplied by the motor for a limited time (during accelleration) can be approximate with the relation KT * I_{max}*
T1= Max Torque that the motor can supply, for a limited time (3-4 sec), to the N_{max} velocity. The restriction of the Torque is due to the maximum voltage supplied from the drive. The data reported in the tables refer to a drive supplied with a 400VAC three phase.
N_{max1}= Velocity till the motor supplies, for a limited time (3-4 sec), the T_{max} Torque. The restricrion of the velocity is due to the maximum voltage suppllied from the drive. The data reported on the tables refer to a drivesupplied with a 400VAC three phase.
N_{max}= Max velocity till the motor supplies, for a limited time (3-4 sec), the T_1 Torque.

Forced Cooling Motors

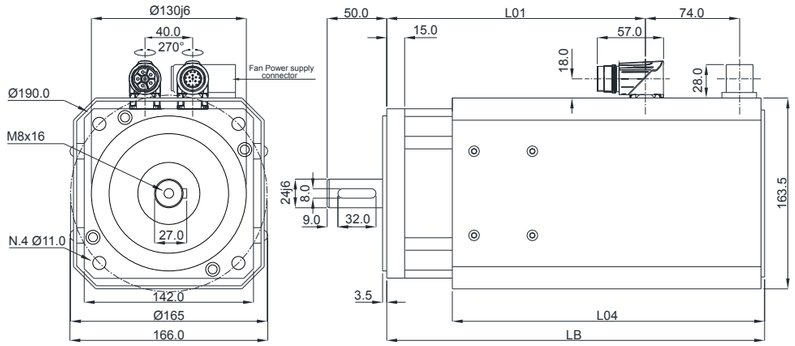

Servomotor Size	Fan Power (W)		Fan Current (A)		LB (mm)	L01 (mm)	L04 (mm)
	230Vac 1P	400Vac 1P	230Vac 1P	400Vac 1P			
E-142-xx-100-0xx-01	45	41	0,3	0,16	267	154	212
E-142-xx-190-0xx-01	45	41	0,3	0,16	317	204	262
E-142-xx-270-0xx-01	45	41	0,3	0,16	367	254	312
E-142-xx-350-0xx-01	45	41	0,3	0,16	417	304	362
E-142-xx-100-1xx-01 - Brake	45	41	0,3	0,16	320,5	207,5	262
E-142-xx-190-1xx-01 - Brake	45	41	0,3	0,16	370,5	257,5	312
E-142-xx-270-1xx-01 - Brake	45	41	0,3	0,16	420,5	307,5	362
E-142-xx-350-1xx-01 - Brake	45	41	0,3	0,16	470,5	357,5	362

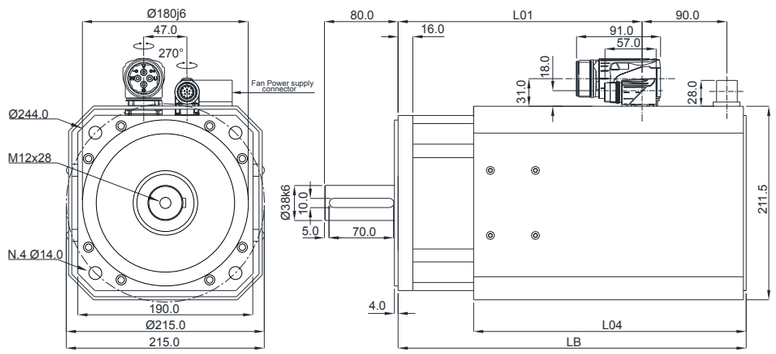

Servomotor Size	Fan Power (W)	Fan Current (A)	LB (mm)	L01 (mm)	L04 (mm)
	400Vac 3P	400Vac 3P			
E-190-xx-280-0xx-01	53	0,15	307,5	174,5	226
E-190-xx-500-0xx-01	53	0,15	377,5	264,5	296
E-190-xx-700-0xx-01	53	0,15	447,5	334,5	366
E-190-xx-280-1xx-01 - Brake	53	0,15	378	245	296
E-190-xx-500-1xx-01 - Brake	53	0,15	448	335	366
E-190-xx-700-1xx-01 - Brake	53	0,15	518	405	366

Motors/Driver Pairing Table

Motor	DRIVE	Stall torquie (Nm)	Peak Torque (Nm)	Max Velocity (rpm)
E-060-60-007-...	EBS 3/6	0,7	2,5	6000
E-060-60-014-...	EBS 3/6	1,4	4,9	6000
E-085-50-010-...	EBS 3/6	1,0	3,6	5000
E-085-35-015-...	EBS 3/6	1,5	4,8	3500
E-085-60-015-...	EBS 3/6	1,5	5,1	5800
E-085-35-029-...	EBS 3/6	2,9	8,7	3500
E-085-60-029-...	EBS 6/12	2,9	10	5800
E-085-35-042-...	EBS 3/6	4,2	8,7	3500
E-085-60-042-...	EBS 6/12	4,2	10,9	5800
E-085-30-053-...	EBS 6/12	5,3	18	3000
E-085-50-053-...	EBS 6/12	5,3	10,9	5000
E-115-50-021-...	EBS 3/6	2,1	6,0	5000
E-115-30-040-...	EBS 3/6	4,0	9,5	3000
E-115-60-040-...	EBS 6/12	4,0	10,9	5800
E-115-30-076-...	EBS 6/12	7,6	19,4	3000
E-115-50-076-...	EBS 12/24	7,6	23,5	5000
E-115-60-076-...	EBS 12/24	7,6	23,5	5500
E-115-30-113-...	EBS 12/24	11,3	38,9	3000
E-115-50-113-...	EBS 12/24	11,3	23,5	5000
E-115-60-113-...	EBS 18/36	11,3	24,5	6000
E-115-60-113-...	EBS 30/60	11,3	39	6000
E-142-50-050-...	EBS 6/12	5,0	13,2	4800
E-142-30-100-...	EBS 12/24	10,0	34	3000
E-142-50-100-...	EBS 12/24	10,0	24,5	5000
E-142-60-100-...**	**EBS 12/24****	**9,7****	**19,4****	**6000****
E-142-60-100-...	EBS 18/38	10	29,2	6000
E-142-30-190-...**	**EBS 12/24****	**18,5****	**37,0****	**3000****
E-142-30-190-...	EBS 30/60	19,0	66,0	3000
E-142-45-190-...	EBS 30/60	19,0	65	4500
E-142-60-190-...	EBS30/60	19,0	56	5800
E-142-30-270-...	EBS 30/60	27,0	93	3000
E-142-45-270-...	EBS 30/60	27,0	77,4	4000
E-142-50-270-...	EBS 50/60	27,0	66	5000
E-142-30-350-...	EBS 30/60	35,0	104,4	3000
E-142-40-350-...	EBS 30/60	35,0	81,6	3900
E-190-40-080-...**	**EBS 6/12****	**7,9****	**15,8****	**4000****
E-190-30-150-...	EBS 12/24	15,0	38	3000
E-190-40-150-...	EBS 12/24	15,0	31,7	4000
E-190-25-280-...**	**EBS 12/24****	**26,6****	**53,3****	**2400****
E-190-40-280-...	EBS 30/60	28,0	70,2	4000
E-190-20-500-...	EBS 30/60	50,0	130	1900
E-190-30-500-...	EBS 30/60	50,0	106,8	3000
E-190-20-700-...	EBS 30/60	70,0	162,0	2000
E-190-30-700-...	EBS 42/84	70,0	150,4	3000
E-260-12-800-...	**EBS 30/60**	80	225	1500
E-260-25-800-...	EBS 42/84	80	233	3000
E-260-25-1450-...	EBS 42/84	145	443	1500
E-260-25-1450-...**	EBS 60/120**	126**	441**	2500**
E-260-12-2300-...**	EBS 60/120**	216**	702**	1500**
E-260-20-2300-...**	EBS 60/120**	132**	686**	2500**
E-260-2300-...	OPD 110	230	365	2500

**In bold style are enhanced the configurations where the drive limits the continous torque that motor can supply

Motors Characteristics

Technology:	Synchronous Brushless Servomotors with sinusoidal fcem. Built using last generation of Iron Boron Neodymium magnets. 8 poles construction
Thermal Insulation:	F class (Max T = 140°C ⟶ Ta = 40°C + ΔT = 100°C) obtained using components in F and H class
Constructive Shape:	B5
Degree of Protection:	IP65 – Natural cooling
Thermal Protection:	PTC
Shaft:	Standard with key
Connections:	FEEDBACK CONNECTORS - Transducer and PTC connections: M17- 90° orientable (square 60mm motors), M23 – 17poles - 90° orientable. POWER CONNECTOR - Motor and brake connections : M17 7poles - 90° orientable (square 60mm motors), M23/M40 6poles - 90° orientable. Motors with Stall current > 20A are fitted with the M40 power connector.
Transducer:	Line Drive incremental encoder 2048p/r with hall sensor Resolver size 15 2P 7V 10Khz Absolute Multi-Turn Hiperface Absolute Smart ABS Tamagawa 17/33bit
Painting:	Protective resins (half luster black)
Options:	24Vdc Brake - Shaft without key - Forced cooling – Coupling with epycicloidal gearbox - safety

Motors Coding

1		2	3	4		5	6		7	8	9		10	11	12		13	14
E	-	0	8	5	-	6	0	-	0	1	5	-	x	x	x	-	x	x

Pos.	Description
1	Motor identification label: "E"
2-3-4	Size: Identify the square side of the motor expressed in mm
5-6	Nominal velocity: Multiplied x 00 defines the motor nominal velocity expressed in rpm
7-8-9	Stall Torque: Defines the motor stall torque expressed in tenth of Nm
10	Brake: 0 = Brake not present / 1 = 24vDC brake integrated inside the motor
11	Motor Transducer 1 = Incremental 5V Line Drive encoder 2048 p/r + Hall sensors 8 = Absolute Multi-Turn SinCos Encoder RS50 Hiperface B = Absolute Smart ABS Tamagawa 17/33bit C = Absolute Multi-Turn SinCos Encoder SKM36 MT Hiperface D = Absolute Multi-Turn SinCos Encoder SRM50 Hiperface
12	Motor Shaft 0 = Shaft without key 1 = Shaft with key (standard)
13-14	Available for special version identification 00 = Standard version 01 = Forced Cooling 0V = 230V version 0G = M17 Connectors (available only for square 60mm motors) 03 = Shaft increased of one size respect standard version 07 = Shaft decreased of one size respect standard version

Square 60 mm Motors

Type Motor		EH-60-60-008	EH-60-60-016	EH-60-60-023
Stall Torque ΔT= 100 °C	Nm	0,8	1,6	2,3
Max velocity - Nmax	rpm	6000	6000	6000
Nominal Current - In	Arms	1	1,7	2,3
Nominal Torque - Tn	Nm	0,64	1,27	1,75
Torque Constant- Kt	Nm/A	0,64	0,74	0,77
Max Current Imax	Arms	3	5,2	6,8
Stall Current [Arms]	Arms	1,25	2,16	3
Voltage Constant - Ke	V/Krpm	27,8	29,8	30,8
Rotor Inertia- Jr	gm^2	0,024	0,031	0,04
Power - P	W	200	400	550
Pair Poles		5	5	5
Max Torque - Tmax	Nm	1,9	3,9	5,2

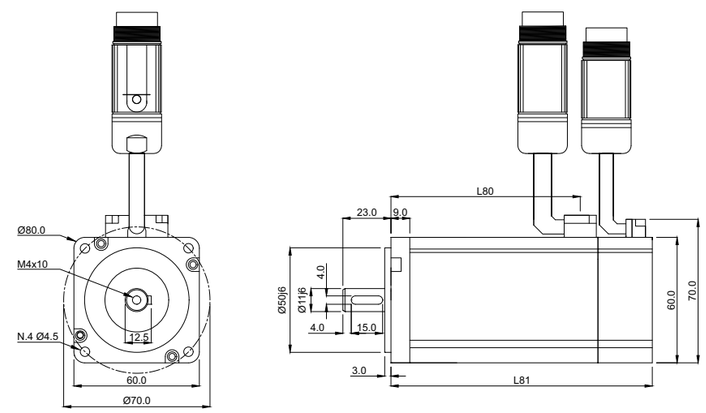

Motor's lenght		EH-060-60-008	EH-060-60-016	EH-060-60-023
L80 without brake	mm	57	75	90
L81 without brake	mm	92	110	125
L80 with brake	mm	57	75	90
L81 with brake	mm	121	139	154

Brake Characteristics		
L80 without brake	Vdc	24V +/- 10%
L81 without brake	A	0,6
L80 with brake	Nm	1,3
L81 with brake	gm2	0,01
Ton / T off	ms	50/20

EH Motors

Square 80 mm Motors

Type Motor		EH-080-50-017	EH-080-60-031	EH-080-60-043	EH-080-40-052	EH-080-60-052
Stall Torque ΔT= 100 °C	Nm	1,7	3,1	4,3	5,2	5,2
Max velocity - Nmax	rpm	5000	6000	6000	4000	6000
Nominal Current - In	Arms	1,3	2,8	3,5	4,5	5,4
Nominal Torque - Tn	Nm	1,3	2,4	3,3	4	4
Torque Constant- Kt	Nm/A	1,02	0,86	0,94	0,89	0,74
Max Current Imax	Arms	3,8	8,4	10,5	13,5	16,3
Stall Current [Arms]	Arms	1,7	3,6	4,7	5,8	8,3
Voltage Constant - Ke	V/Krpm	39,2	34,9	36,7	36,8	30,7
Rotor Inertia- Jr	gm^2	0,061	0,093	0,12	0,13	0,13
Power - P	W	400	750	1000	1250	1250
Pair Poles		5	5	5	5	5
Max Torque - Tmax	Nm	3,9	7,2	9,9	12	12

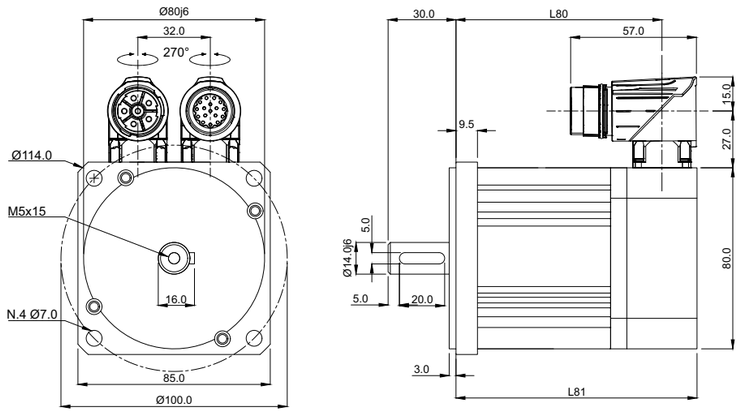

Motor's lenght		EH-080-50-017	EH-080-60-031	EH-080-60-043	EH-080-40-052	EH-080-60-052
L80 without brake	mm	96	116	131	146	146
L81 without brake	mm	110	132	147	162	162
L80 with brake	mm	134	156	171	186	186
L81 with brake	mm	150	172	187	202	202

Brake Characteristics						
Supply Voltage	Vdc	24V +/- 10%	24V +/- 10%	24V +/- 10%	24V +/- 10%	24V +/- 10%
Current	A	0,6	0,6	0,6	0,6	0,6
Braking Torque	Nm	2,5	2,5	2,5	2,5	2,5
Inertia	gm2	0,007	0,007	0,007	0,007	0,007
Ton / T off	ms	50/20	50/20	50/20	50/20	50/20

Square 110 mm Motors

Type Motor		EH-110-40-055	EH-110-40-083	EH-110-35-098
Stall Torque ΔT= 100 °C	Nm	5,5	8,3	9,8
Max velocity - Nmax	rpm	4000	4000	4000
Nominal Current - In	Arms	3,8	5,6	5
Nominal Torque - Tn	Nm	4,2	6,4	7,5
Torque Constant- Kt	Nm/A	1,11	1,15	1,5
Max Current Imax	Arms	11,4	14,1	15
Stall Current [Arms]	Arms	4,9	7,2	6,5
Voltage Constant - Ke	V/Krpm	46,5	48	42
Rotor Inertia- Jr	gm^2	0,78	1,06	1,24
Power - P	W	1300	1700	2000
Pair Poles	S	5	5	5
Max Torque - Tmax	Nm	12,6	16,2	22,5

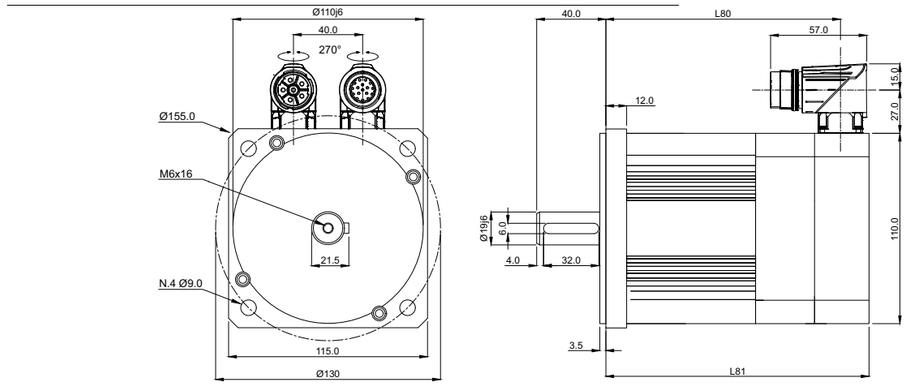

Motor's lenght		EH-110-40-055	EH-110-40-083	EH-110-35-098
L80 without brake	mm	133	153	164
L81 without brake	mm	153	173	184
L80 with brake	mm	169	189	200
L81 with brake	mm	189	209	220

Brake Characteristics				
Supply Voltage	Vdc	24V +/- 10%	24V +/- 10%	24V +/- 10%
Current	A	0,8	0,8	0,8
Braking Torque	Nm	8,0	8,0	8,0
Inertia	gm2	0,064	0,064	0,064
Ton / T off	ms	50/20	50/20	50/20

Square 130 mm Motors

Type Motor		EH-130-35-109	EH-130-40-109	EH-130-35-149	EH-130-40-149	EH-130-30-189	EH-130-40-189	EH-130-20-231
Stall Torque ΔT= 100 °C	Nm	10,9	10,9	14,9	14,9	18,9	18,9	23,1
Max velocity - Nmax	rpm	3500	4000	3500	4000	3000	4000	11,88
Nominal Current - In	Arms	8,8	8,8	10,4	10,4	13,2	11,2	2000
Nominal Torque - Tn	Nm	8,4	8,4	11,5	11,5	14,6	14,6	11,2
Torque Constant- Kt	Nm/A	0,95	1,3	1,1	1,4	1,1	1,59	17,8
Max Current Imax	Arms	23,5	26,5	26,5	31,3	31,2	39,8	33,5
Stall Current [Arms]	Arms	10,2	11,4	11,5	13,5	13,5	17,2	53,4
Voltage Constant - Ke	V/Krpm	44,6	36	45	35	50	35	55
Rotor Inertia- Jr	gm^2	2,37	2,37	3,01	3,01	4,07	4,07	1,59
Power - P	W	2600	2600	3600	3600	3800	3800	4,55
Pair Poles		5	5	5	5	5	5	2800
Max Torque - Tmax	Nm	25,2	25,2	34,5	34,5	43,8	43,8	5

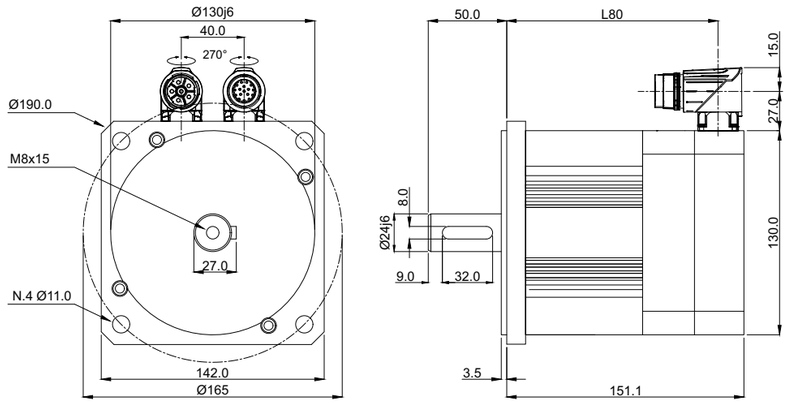

Motor's lenght		EH-130-35-109	EH-130-40-109	EH-130-35-149	EH-130-40-149	EH-130-30-189	EH-130-40-189	EH-130-20-231
L80 without brake	mm	153	153	172	172	204	204	225
L81 without brake	mm	173	173	192	192	224	224	245
L80 with brake	mm	180	180	199	199	231	231	252
L81 with brake	mm	200	200	219	219	251	251	272

Brake Characteristics		EH-130-35-109	EH-130-40-109	EH-130-35-149	EH-130-40-149	EH-130-30-189	EH-130-40-189	EH-130-20-231
Supply Voltage	Vdc	24V +/- 10%	24V +/- 10%	24V +/- 10%	24V +/- 10%	24V +/- 10%	24V +/- 10%	24V +/- 10%
Current	A	1	1	1	1	1	1	1
Braking Torque	Nm	12	12	12	12	12	12	12
Inertia	gm2	0,166	0,166	0,166	0,166	0,166	0,166	0,166
Ton / T off	ms	50/20	50/20	50/20	50/20	50/20	50/20	50/20

Azionamento bruslhess drive integrato tipo ED o pressa ED4H - 220V Trifase

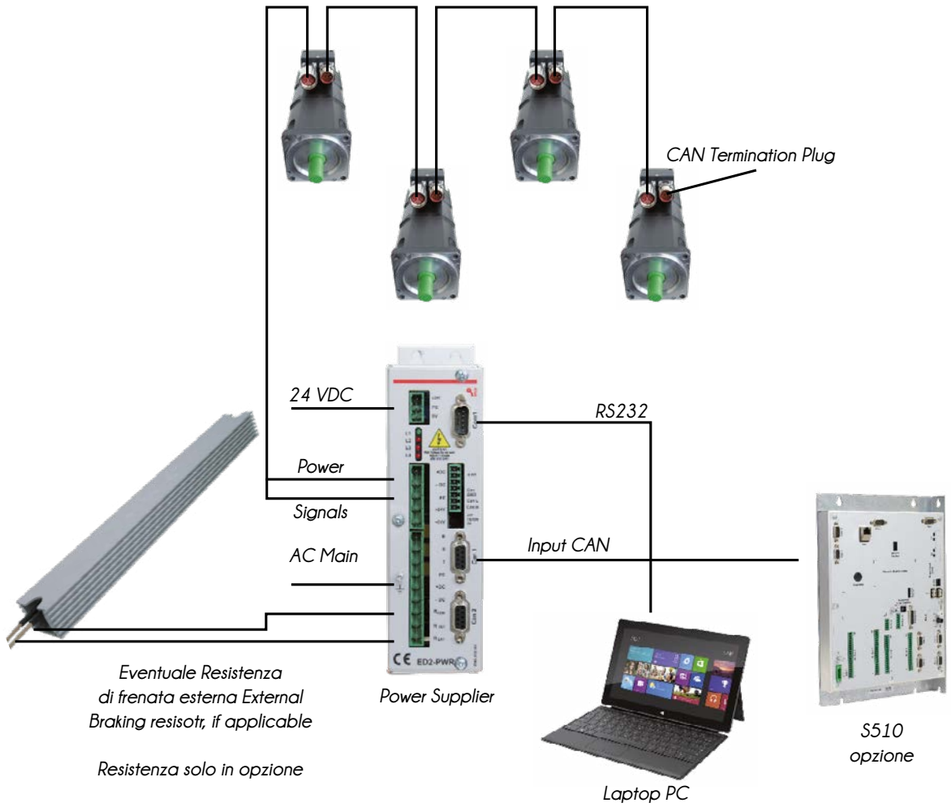

Alimentazione da 220v trifase a 300v DC che può alimentare fino a 8/10 motori in base al size dei motori. (esiste anche una versione più piccola per 4 motori

Motori con AZM integrato da 1N/m a 7,6 N/m

Motor's Range

Type Motor	ED4-085-50-010	ED4-085-30-015	ED4-0805-50-015	ED4H-085-30-029	ED4-115-45-021	EDH-115-30-040	ED4-115-40-040	ED4-115-30-076
Stall Torque ΔT= 100 °C	1	1,5	1,5	2,9	2,1	4	4	7,6
Max velocity [rpm]	5000	3000	5000	3000	4500	3000	4000	3000
Nominal Current [Arms]	1,5	1,4	2,2	2,6	2,8	3,5	4,4	5,5
Nominal Torque [Nm]	0,9	1,3	1,3	2,4	1,8	3,2	3,2	5,4
Torque Constant [Nm/A]	0,6	0,91	0,60	0,91	0,65	0,91	0,73	0,98
Electric Constant [V/Krpm]	36	55	36	55	39	55	44	59
Stall Current [Arms]	1,67	1,65	2,5	3,19	3,23	4,4	5,45	7,8
TPeak Torque [Nm]	3,6	5,5	3,6	10,9	7,8	10,9	8,8	15,8
Rotor Inertia [gm²]	0,070	0,092	0,092	0,172	0,280	0,500	0,500	0,960
Power [W]	520	470	780	910	990	1250	1680	2100
Weight without brake (Kg)	2,8	3,2	3,2	4,3	4,8	6,8	6,8	9,7

ED/ED4/85 Motors

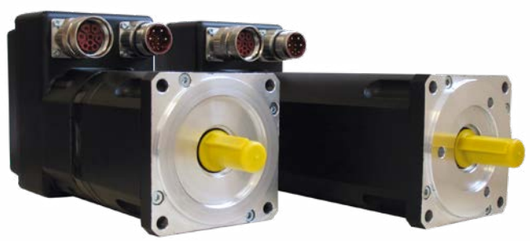

Motori da 1 a 4,2 N/m

ED/ED4 115 Motors

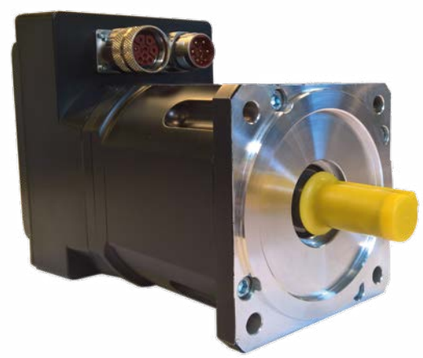

Motori da 2,1 a 7,6 N/m

ED4 Motors

Square 85 mm Motors

Type motor		ED4-085-50-010	ED4H-085-XX-015	ED4-085-30-029
L80 without brake	mm	77	100	130
L81 without brake	mm	186	209	29
L80 with brake	mm	105	148	178
L81 with brake	mm	214	257	287

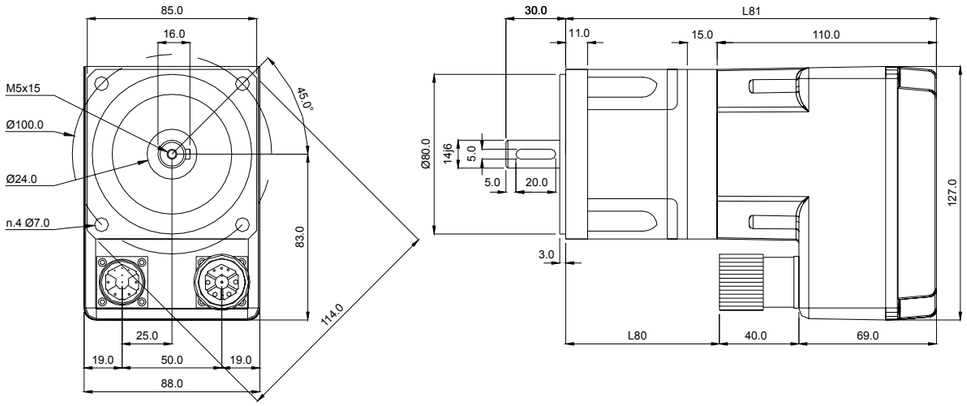

Square 115 mm Motors

Type motor		ED4-115-45-021	ED4-115-XX-040	ED4-115-30-076
L80 without brake	mm	62	108,5	148,5
L81 without brake	mm	180,5	227	267
L80 with brake	mm	105,5	157,5	197,5
L81 with brake	mm	224	276	316

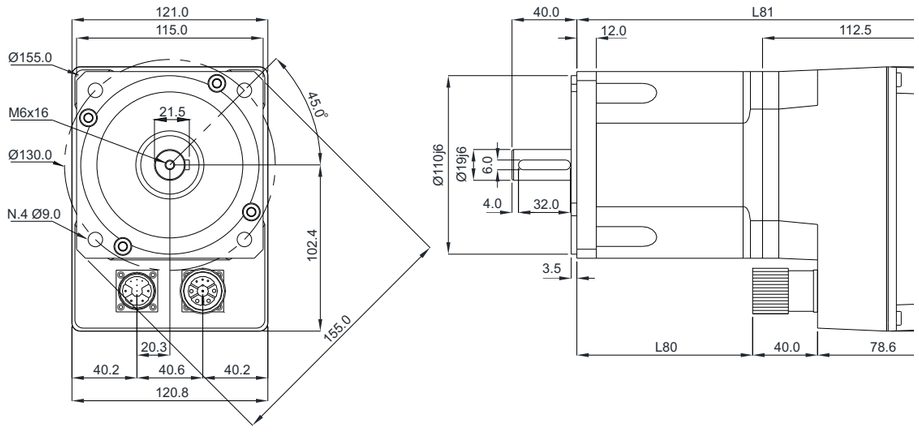

Motor Coding

1		2	3	4		5	6		7	8	9		10	11	12		13	14
ED4	-	0	8	5	-	3	0	-	0	1	5	-	X	1	X	-	X	X

Pos.	Description
1	Servomotor identification label "ED3", "ED4"
2-3-4	Size Identify the square side of the motor expressed in mm
5-6	Max Velocity Multiplied x 00 defines the motor max velocity expressed in rpm
7-8-9	Stall Torque Defines the motor stall torque expressed in tenth of Nm (so 015 means 0,5 Nm)
10	Brake 0 = Brake not installed 1 = 24Vdc brake present
11	Transducer 1 = Line Drive 2048 pulses x rot. incremental Encoder with Hall sensors 5 = Absolute Multi-Turn Hengstler Encoder AD36 B = Absolute Smart ABS Tamagawa 17/33bit
12	Shaft 0 = Shaft without key. 1 = Shaft with key (standard).
13	Cable exit 0 = versus motor shaft.
14	Available for special version 0 = Standard version. 7 = Compact, smooth radiator.

ED4H Motors

Motori con azionamento integrato versione ED4H da 0,64Nim a 7,5Nim

ED4H size 60
0,64 Nim
2,2 Nim

ED4H80
1,3 Nim
2,4 Nim
3,3Nim

ED4H 110
4,4 Nim
5,4 Nim
7,5 Nim

Motor's Range

Type Motor	ED4H-060-60-008	ED4H-060-60-016	ED4H-060-60-023	ED4H-080-60-017	ED4H-080-60-031	ED4H-080-60-043	ED4H-110-40-055	ED4H-110-40-083	ED4H-110-30-098
Stall Torque ΔT= 100 °C	0,8	1,6	2,3	1,7	3,1	4,3	5,5	8,3	9,8
Max velocity [rpm]	6000	6000	6000	5000	6000	6000	4000	4000	300
Nominal Current [Arms]	1,7	2,9	3,9	2,2	4,8	6,3	6,5	8	8
Nominal Torque [Nm]	0,64	1,27	1,75	1,3	2,4	3,3	4,2	6,4	7,5
Torque Constant [Nm/A]	0,38	0,438	0,449	0,59	0,52	0,54	0,65	0,67	
Electric Constant [V/Krpm]	16		18	23	20	21	27		
Stall Current [Arms]	2,2	3,6	5	2,8	5,9	8	8	8	8
TPeak Torque [Nm]	2,28	2,6	5,4	3,5	6,2	8,6	10,4	10,7	
Rotor Inertia [gm²]	0,024	0,031	0,04	0,061	0,093	0,093	0,767	1,06	1,238
Power [W]	200	400	550	400	750	1000	1300	1700	1700

Square 60 mm Motors

Type motor		ED4H-060-60-008	ED4H-060-60 016	ED4H-060-60 016
L80 without brake	mm	77	95	110
L81 without brake	mm	170	188	203
L80 with brake	mm	105	124	139
L81 with brake	mm	199	217	232

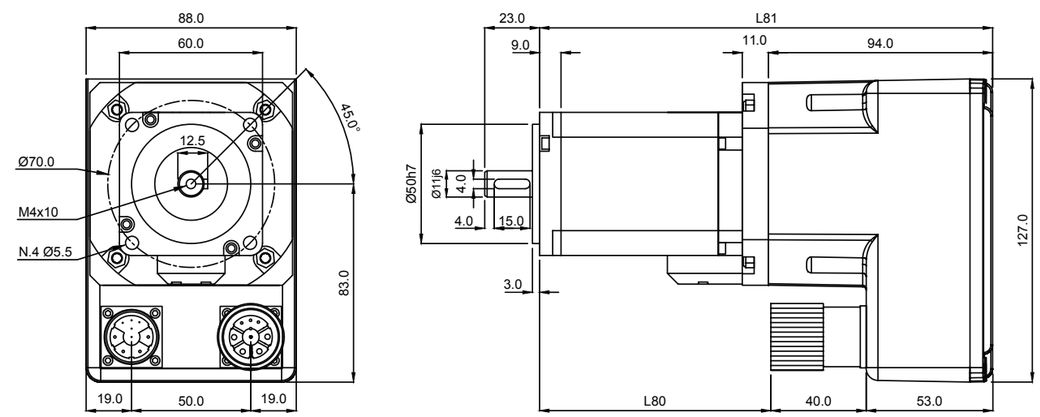

ED4H Motors

Square 80 mm Motors

Type motor		ED4H-080-50-017	ED4H-080-50-031	ED4H-080-60-043
L80 without brake	mm	87	109	124
L81 without brake	mm	196	218	233
L80 with brake	mm	127	149	164
L81 with brake	mm	236	258	273

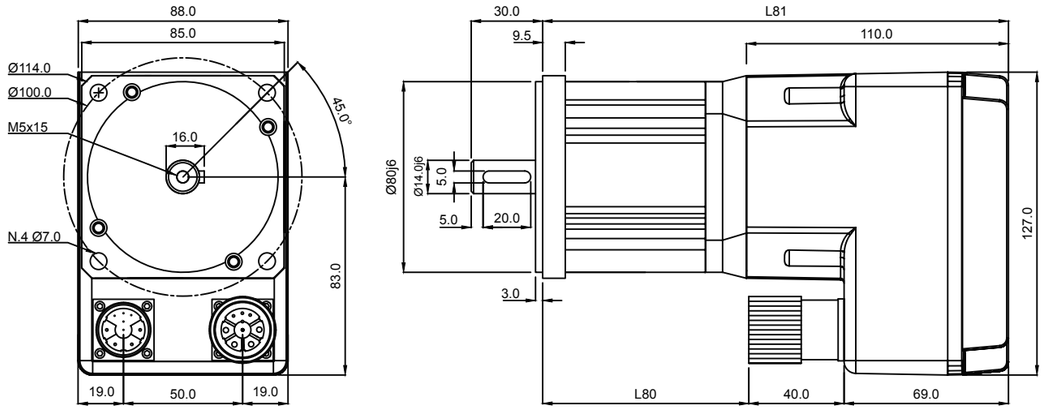

Square 110 mm Motors

Type motor		ED4H-110-40-055	ED4H-110-50-083	ED4H-110-30-098
L80 without brake	mm	102	122	133
L81 without brake	mm	221	241	252
L80 with brake	mm	142	178	189
L81 with brake	mm	261	297	308

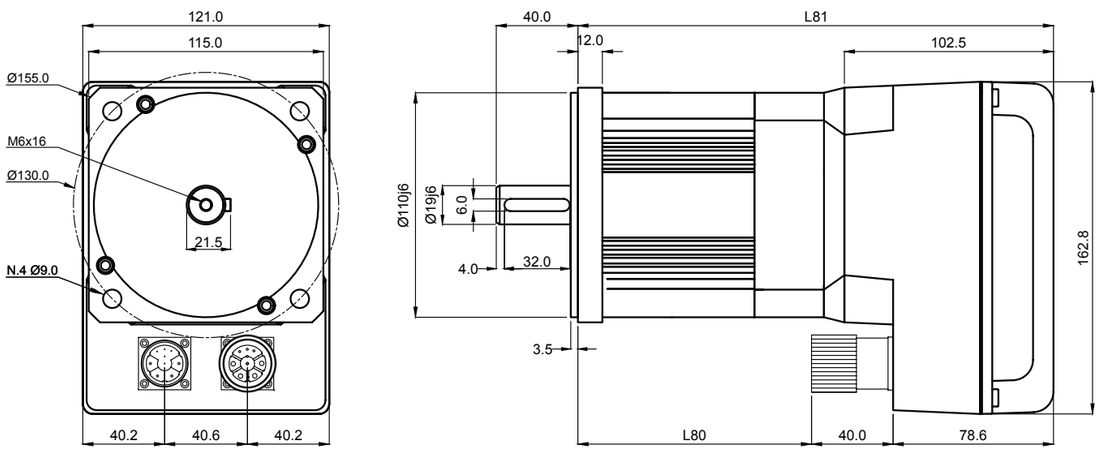

Motor Coding

1		2	3	4		5	6		7	8	9		10	11	12		13	14
ED4H	-	0	8	0	-	6	0	-	0	1	7	-	X	X	X	-	X	X

Pos.	Description
1	Servomotor identification label: "ED4H"
2-3-4	Size Identify the square side of the motor expressed in mm
5-6	Max Velocity Multiplied x 00 defines the motor max velocity expressed in rpm
7-8-9	Stall Torque Defines the motor stall torque expressed in tenth of Nm (so 015 means 0,5 Nm)
10	Brake 0 = Brake not installed 1 = 24Vdc brake present
11	Transducer 1 = Line Drive 2500 pulses x rot. incremental Encoder with Hall sensors 5 = Absolute Multi-Turn Hengstler Encoder 17/33bit
12	Shaft 0 = Shaft without key. 1 = Shaft with key (standard).
13	Cable exit 0 = versus motor shaft.
14	Available for special version 0 = Standard version. 7 = Compact, smooth radiator.

Note

Note

Note

Note

Note

ESAUTOMOTION SPA

HQ & Registered Office: Via della Meccanica 23/1 41012 Carpi (MO) Italy
Tel. +39 059851414 - Fax. +39 059851313 www.esautomotion.com info@esautomotion.com

BENELUX

Morris Solutions

Schoterlandseweg 94
8413 NE Oudehorne, Netherlands
Tel. +31 (0)653698009
www.morrissolutions.eu
info@morrissolutions.eu

USA, CANADA & MEXICO

Esautomation Inc.

Jan Hilpert
13201 Northwest Fwy Suite 800
Houston, TX 77040, USA
Tel. + 1 713 586 8866
Mob. + 1 281 979 4134
jan.hilpert@esautomationinc.com
www.esautomationinc.com

SPAIN

Esautomotion Ibérica
Rochelle Laurito

Direcciòn: 6 Carrer de Mossèn Jacint
Verdaguer 08940 Cornellà de Llobreagat
Barcelona, Spain
Tel. + 39 342 1308146
www.esautomotion.com

TURKEY

Esautomotion Turkey
SLM Makine

Alaaddinbey Mh.626 - SK. Sam-1 No:22B
16120 Nilufer Burga, Turchia

KOREA

Flowin

402 U-Jung Praza 106-5 - Bansong
Kyungki-Do, Korea Whasung-Si, South Korea
445-160
Tel. +82 31 613 6120, 6124
Fax +82 31 613 6126
www.flowin.co.kr
kysong@flowin.org

BRASIL

ESAUTOMOTION DO BRASIL
Marcelo Lipi

Sede Legal: Rua Venerando Ribeiro, 575
Mococa - SP
Sede Operacionals:
Estrada Dos Pereiras,
1000A Ribeirao Dos Porcos
CEP 12.946-375 - ATIBA/SP-BRAZIL
Tel. +55 19 99337 6693
marcelo.lipi@esautomotion.com

INDIA Bending Division:

Esautomotion Controls

Plot No: 488B, KIADB M.S.Complex, Unit
No: 2B-07, Ground Floor, 2nd Block, 14th
Cross, 4th Phase Peenya Industrials Area,
Bangalore – 560 058, India
Mob. +91 80 28366223
Mob. +91 9686654400
Mob. +91 9845153036
esautomotioncontrols@gmail.com
Skype: chandrasm2

INDIA Cutting Division

Trokut Solutions Pvt. Ltd.

Head Office Address:
F9A, Pinnacle Business Park, Mahakali Caves
Road, Shanti Nagar, Andheri East,
Mumbai 400 093, India
Tel. +91 9324-299246 /47 / 48
www.trokutsolutions.com
sales@trokutsolutions.com

CHINA

Esautomotion Trading Shanghai Co. Ltd
Paolo Borelli

Suite 1002, Huai Hai China Tower,
885 Ren Min Road,
HuangPu District Shanghai, 200010
Tel. +86 156 1839 7498
info@esautomotion.cn
cynthia.gong@esautomotion.cn
paolo.borelli@esautomotion.cn

ARGENTINA

Control Numerico System

Romeo 3200, lote 112. (1669) Manuel Alberti
Buenos Aires - Republica Argentina
Tel. 0351 152 112111
011 154 0990314
Desde Exterior:
+54 9351 211 2111
+54 911 4099 0314
cnscba@gmail.com
cnsbue@gmail.com